ABB general machinery drives

User's manual
ACS355 drives

efesotomasyon.com

efesotomasyon.com

Power and productivity
for a better world™

List of related manuals

Drive manuals and guides	Code (English)	
ACS355 user's manual	*3AUA0000066143*	1)
ACS355 drives with IP66/67 / UL Type 4x enclosure supplement	*3AUA0000066066*	1)
ACS355 Common DC application guide	*3AUA0000070130*	4)

Option manuals and guides		
FCAN-01 CANopen adapter module user's manual	*3AFE68615500*	1)
FDNA-01 DeviceNet adapter module user's manual	*3AFE68573360*	1)
FECA-01 EtherCAT adapter module user's manual	*3AUA0000068940*	1)
FENA-01 Ethernet adapter module Modbus/TCP protocol manual	*3AUA0000022989*	1)
FMBA-01 Modbus adapter module user's manual	*3AFE68586704*	1)
FLON-01 LONWORKS® adapter module user's manual	*3AUA0000041017*	1)
FPBA-01 PROFIBUS DP adapter module user's manual	*3AFE68573271*	1)
FRSA-00 RS-485 adapter board user's manual	*3AFE68640300*	1)
MFDT-01 FlashDrop user's manual	*3AFE68591074*	1)
MPOT-01 potentiometer module instructions for installation and use	*3AFE68591082*	1), 3)
MREL-01 relay output extension module user's manual	*3AUA0000035974*	1)
MTAC-01 pulse encoder interface module user's manual	*3AFE68591091*	1)
MUL1-R1 installation instructions for ACS150, ACS310, ACS350 and ACS355	*3AFE68642868*	1), 3)
MUL1-R3 installation instructions for ACS310, ACS350 and ACS355	*3AFE68643147*	1), 3)
MUL1-R4 installation instructions for ACS350 and ACS355	*3AUA0000025916*	1), 3)
SREA-01 Ethernet adapter module quick start-up guide	*3AUA0000042902*	1)
SREA-01 Ethernet adapter module user's manual	*3AUA0000042896*	2)

Maintenance manuals and guides	
Guide for capacitor reforming in ACS50, ACS55, ACS150, ACS310, ACS350, ACS355, ACS550 and ACH550	*3AFE68735190*

1) Delivered as a printed copy with the drive or optional equipment

2) Delivered in PDF format with the drive or optional equipment

3) Multilingual

4) Available from your local ABB representative

Manuals are available in PDF format on the Internet (unless otherwise noted). See section *Document library on the Internet* on the inside of the back cover.

efesotomasyon.com

User's Manual

ACS355

Table of contents

1. Safety

4. Mechanical installation

6. Electrical installation

8. Start-up, control with I/O and ID run

3AUA0000066143 Rev A
EN
EFFECTIVE: 2010-01-01

© 2010 ABB Oy. All Rights Reserved.

Table of contents

List of related manuals 2

1. Safety

What this chapter contains 17
Use of warnings 17
Safety in installation and maintenance 18
Electrical safety 18
General safety 19
Safe start-up and operation 20
Electrical safety 20
General safety 20

2. Introduction to the manual

What this chapter contains 21
Applicability 21
Target audience 21
Purpose of the manual 21
Contents of this manual 22
Related documents 23
Categorization by frame size 23
Quick installation and commissioning flowchart 24

3. Operation principle and hardware description

What this chapter contains 25
Operation principle 25
Product overview 26
Layout 26
Power connections and control interfaces 27
Type designation label 28
Type designation key 29

4. Mechanical installation

What this chapter contains 31
Checking the installation site 31
Requirements for the installation site 31
Required tools 32
Unpacking 33
Checking the delivery 33
Installing 34
Install the drive 34
Fasten clamping plates 35
Attach the optional fieldbus module 35

efesotomasyon.com

5. Planning the electrical installation

What this chapter contains . . . 37
Implementing the AC power line connection . . . 37
Selecting the supply disconnecting device (disconnecting means) . . . 37
European union . . . 38
Other regions . . . 38
Checking the compatibility of the motor and drive . . . 38
Selecting the power cables . . . 38
General rules . . . 38
Alternative power cable types . . . 39
Motor cable shield . . . 39
Additional US requirements . . . 40
Selecting the control cables . . . 40
General rules . . . 40
Relay cable . . . 41
Control panel cable . . . 41
Routing the cables . . . 41
Control cable ducts . . . 42
Protecting the drive, input power cable, motor and motor cable in short circuit situations and against thermal overload . . . 43
Protecting the drive and input power cable in short-circuit situations . . . 43
Protecting the motor and motor cable in short-circuit situations . . . 43
Protecting the drive, motor cable and input power cable against thermal overload . . . 43
Protecting the motor against thermal overload . . . 44
Implementing the Safe torque off (STO) function . . . 44
Using residual current devices (RCD) with the drive . . . 44
Using a safety switch between the drive and the motor . . . 44
Implementing a bypass connection . . . 44
Protecting the contacts of relay outputs . . . 45

6. Electrical installation

What this chapter contains . . . 47
Checking the insulation of the assembly . . . 47
Drive . . . 47
Input power cable . . . 47
Motor and motor cable . . . 48
Checking the compatibility with IT (ungrounded) and corner-grounded TN systems . . . 48
Connecting the power cables . . . 49
Connection diagram . . . 49
Connection procedure . . . 50
Connecting the control cables . . . 51
I/O terminals . . . 51
Default I/O connection diagram . . . 54
Connection procedure . . . 56

7. Installation checklist

Checking the installation . . . 57

8. Start-up, control with I/O and ID run

What this chapter contains . . . 59
How to start up the drive . . . 59
How to start up the drive without a control panel . . . 60
How to perform a manual start-up . . . 61
How to perform a guided start-up . . . 66
How to control the drive through the I/O interface . . . 68
How to perform the ID run . . . 69
ID run procedure . . . 69

9. Control panels

What this chapter contains . . . 73
About control panels . . . 73
Applicability . . . 73
Basic control panel . . . 75
Features . . . 75
Overview . . . 76
Operation . . . 77
Output mode . . . 80
Reference mode . . . 81
Parameter mode . . . 82
Copy mode . . . 85
Basic control panel alarm codes . . . 86
Assistant control panel . . . 87
Features . . . 87
Overview . . . 88
Operation . . . 89
Output mode . . . 93
Parameters mode . . . 95
Assistants mode . . . 98
Changed parameters mode . . . 100
Fault logger mode . . . 101
Time and date mode . . . 102
Parameter backup mode . . . 104
I/O settings mode . . . 107

10. Application macros

What this chapter contains . . . 109
Overview of macros . . . 109
Summary of the I/O connections of the application macros . . . 111
ABB standard macro . . . 112
Default I/O connections . . . 112
3-wire macro . . . 113
Default I/O connections . . . 113
Alternate macro . . . 114
Default I/O connections . . . 114
Motor potentiometer macro . . . 115
Default I/O connections . . . 115

Hand/Auto macro . . . 116
Default I/O connections . . . 116
PID control macro . . . 117
Default I/O connections . . . 117
Torque control macro . . . 118
Default I/O connections . . . 118
User macros . . . 119

11. Program features

What this chapter contains . . . 121
Start-up assistant . . . 121
Introduction . . . 121
Default order of the tasks . . . 122
List of the tasks and the relevant drive parameters . . . 123
Contents of the assistant displays . . . 124
Local control vs. external control . . . 125
Local control . . . 125
External control . . . 126
Settings . . . 126
Diagnostics . . . 126
Block diagram: Start, stop, direction source for *EXT1* . . . 127
Block diagram: Reference source for *EXT1* . . . 127
Reference types and processing . . . 128
Settings . . . 128
Diagnostics . . . 128
Reference trimming . . . 129
Settings . . . 129
Example . . . 130
Programmable analog inputs . . . 130
Settings . . . 130
Diagnostics . . . 131
Programmable analog output . . . 131
Settings . . . 131
Diagnostics . . . 131
Programmable digital inputs . . . 132
Settings . . . 132
Diagnostics . . . 132
Programmable relay output . . . 133
Settings . . . 133
Diagnostics . . . 133
Frequency input . . . 133
Settings . . . 133
Diagnostics . . . 133
Transistor output . . . 134
Settings . . . 134
Diagnostics . . . 134
Actual signals . . . 134
Settings . . . 134
Diagnostics . . . 135
Motor identification . . . 135

Settings . . . 135
Power loss ride-through . . . 136
Settings . . . 136
DC magnetizing . . . 136
Settings . . . 136
Maintenance trigger . . . 137
Settings . . . 137
DC hold . . . 137
Settings . . . 137
Speed compensated stop . . . 137
Settings . . . 137
Flux braking . . . 138
Settings . . . 139
Flux optimization . . . 139
Settings . . . 139
Acceleration and deceleration ramps . . . 139
Settings . . . 139
Critical speeds . . . 140
Settings . . . 140
Constant speeds . . . 140
Settings . . . 140
Custom U/f ratio . . . 141
Settings . . . 141
Diagnostics . . . 141
Speed controller tuning . . . 142
Settings . . . 142
Diagnostics . . . 143
Speed control performance figures . . . 143
Torque control performance figures . . . 143
Scalar control . . . 144
Settings . . . 144
IR compensation for a scalar controlled drive . . . 144
Settings . . . 144
Programmable protection functions . . . 144
AI<Min . . . 144
Panel loss . . . 145
External fault . . . 145
Stall protection . . . 145
Motor thermal protection . . . 145
Underload protection . . . 146
Earth fault protection . . . 146
Incorrect wiring . . . 146
Input phase loss . . . 147
Pre-programmed faults . . . 147
Overcurrent . . . 147
DC overvoltage . . . 147
DC undervoltage . . . 147
Drive temperature . . . 147
Short circuit . . . 147
Internal fault . . . 147
Operation limits . . . 147

Settings . . . 147
Power limit . . . 148
Automatic resets . . . 148
Settings . . . 148
Diagnostics . . . 148
Supervisions . . . 148
Settings . . . 148
Diagnostics . . . 148
Parameter lock . . . 149
Settings . . . 149
PID control . . . 149
Process controller PID1 . . . 149
External/Trim controller PID2 . . . 149
Block diagrams . . . 150
Settings . . . 152
Diagnostics . . . 152
Sleep function for the process PID (PID1) control . . . 153
Example . . . 154
Settings . . . 154
Diagnostics . . . 154
Motor temperature measurement through the standard I/O . . . 155
Settings . . . 156
Diagnostics . . . 156
Control of a mechanical brake . . . 157
Example . . . 157
Operation time scheme . . . 158
State shifts . . . 159
Settings . . . 160
Jogging . . . 161
Settings . . . 162
Diagnostics . . . 162
Timed functions . . . 163
Example . . . 164
Settings . . . 165
Timer . . . 165
Settings . . . 165
Diagnostics . . . 165
Counter . . . 165
Settings . . . 165
Diagnostics . . . 166
Sequence programming . . . 166
Settings . . . 166
Diagnostics . . . 167
State shifts . . . 168
Example 1 . . . 169
Example 2 . . . 170
Safe torque off (STO) function . . . 174

12. Actual signals and parameters

What this chapter contains . . . 175

Terms and abbreviations . . . 175
Fieldbus addresses . . . 175
Fieldbus equivalent . . . 176
Default values with different macros . . . 176
Actual signals . . . 178
01 OPERATING DATA . . . 178
03 FB ACTUAL SIGNALS . . . 181
04 FAULT HISTORY . . . 183
Parameters . . . 185
10 START/STOP/DIR . . . 185
11 REFERENCE SELECT . . . 187
12 CONSTANT SPEEDS . . . 192
13 ANALOG INPUTS . . . 197
14 RELAY OUTPUTS . . . 199
15 ANALOG OUTPUTS . . . 202
16 SYSTEM CONTROLS . . . 203
18 FREQ IN & TRAN OUT . . . 209
19 TIMER & COUNTER . . . 210
20 LIMITS . . . 214
21 START/STOP . . . 218
22 ACCEL/DECEL . . . 223
23 SPEED CONTROL . . . 227
24 TORQUE CONTROL . . . 230
25 CRITICAL SPEEDS . . . 231
26 MOTOR CONTROL . . . 232
29 MAINTENANCE TRIG . . . 237
30 FAULT FUNCTIONS . . . 238
31 AUTOMATIC RESET . . . 246
32 SUPERVISION . . . 248
33 INFORMATION . . . 250
34 PANEL DISPLAY . . . 251
35 MOTOR TEMP MEAS . . . 256
36 TIMED FUNCTIONS . . . 258
40 PROCESS PID SET 1 . . . 261
41 PROCESS PID SET 2 . . . 271
42 EXT / TRIM PID . . . 272
43 MECH BRK CONTROL . . . 274
50 ENCODER . . . 275
51 EXT COMM MODULE . . . 276
52 PANEL COMM . . . 277
53 EFB PROTOCOL . . . 278
54 FBA DATA IN . . . 280
55 FBA DATA OUT . . . 280
84 SEQUENCE PROG . . . 281
98 OPTIONS . . . 294
99 START-UP DATA . . . 294

13. Fieldbus control with embedded fieldbus

What this chapter contains . . . 301
System overview . . . 301

Setting up communication through the embedded Modbus . . . 303
Drive control parameters . . . 304
Fieldbus control interface . . . 307
Control word and Status word . . . 307
References . . . 307
Actual values . . . 307
Fieldbus references . . . 308
Reference selection and correction . . . 308
Fieldbus reference scaling . . . 310
Reference handling . . . 311
Actual value scaling . . . 311
Modbus mapping . . . 312
Register mapping . . . 312
Function codes . . . 314
Exception codes . . . 314
Communication profiles . . . 315
ABB drives communication profile . . . 315
DCU communication profile . . . 320

14. Fieldbus control with fieldbus adapter

What this chapter contains . . . 325
System overview . . . 325
Setting up communication through a fieldbus adapter module . . . 327
Drive control parameters . . . 328
Fieldbus control interface . . . 330
Control word and Status word . . . 330
References . . . 331
Actual values . . . 331
Communication profile . . . 331
Fieldbus references . . . 332
Reference selection and correction . . . 332
Fieldbus reference scaling . . . 334
Reference handling . . . 334
Actual value scaling . . . 334

15. Fault tracing

What this chapter contains . . . 335
Safety . . . 335
Alarm and fault indications . . . 335
How to reset . . . 335
Fault history . . . 336
Alarm messages generated by the drive . . . 337
Alarms generated by the basic control panel . . . 341
Fault messages generated by the drive . . . 344
Embedded fieldbus faults . . . 352
No master device . . . 352
Same device address . . . 352
Incorrect wiring . . . 352

16. Maintenance and hardware diagnostics

What this chapter contains . . . 353
Maintenance intervals . . . 353
Cooling fan . . . 354
Replacing the cooling fan (frame sizes R1...R4) . . . 354
Capacitors . . . 355
Reforming the capacitors . . . 355
Power connections . . . 355
Control panel . . . 356
Cleaning the control panel . . . 356
Changing the battery in the assistant control panel . . . 356
LEDs . . . 356

17. Technical data

What this chapter contains . . . 357
Ratings . . . 358
Definitions . . . 359
Sizing . . . 359
Derating . . . 359
Power cable sizes and fuses . . . 361
Dimensions, weights and free space requirements . . . 363
Dimensions and weights . . . 363
Free space requirements . . . 363
Losses, cooling data and noise . . . 364
Losses and cooling data . . . 364
Noise . . . 365
Terminal and lead-through data for the power cables . . . 366
Terminal and lead-through data for the control cables . . . 366
Electric power network specification . . . 367
Motor connection data . . . 367
Control connection data . . . 369
Brake resistor connection . . . 370
Common DC connection . . . 370
Efficiency . . . 370
Degrees of protection . . . 370
Ambient conditions . . . 371
Materials . . . 372
Applicable standards . . . 372
CE marking . . . 373
Compliance with the European EMC Directive . . . 373
Compliance with EN 61800-3:2004 . . . 373
Definitions . . . 373
Category C1 . . . 373
Category C2 . . . 374
Category C3 . . . 374
UL marking . . . 375
UL checklist . . . 375
C-Tick marking . . . 376
TÜV NORD Safety Approved mark . . . 376

RoHS marking . . . 376
Compliance with the Machinery Directive . . . 376
Patent protection in the USA . . . 377

18. Dimension drawings

Frame sizes R0 and R1, IP20 (cabinet installation) / UL open . . . 380
Frame sizes R0 and R1, IP20 / NEMA 1 . . . 381
Frame size R2, IP20 (cabinet installation) / UL open . . . 382
Frame size R2, IP20 / NEMA 1 . . . 383
Frame size R3, IP20 (cabinet installation) / UL open . . . 384
Frame size R3, IP20 / NEMA 1 . . . 385
Frame size R4, IP20 (cabinet installation) / UL open . . . 386
Frame size R4, IP20 / NEMA 1 . . . 387

19. Appendix: Resistor braking

What this chapter contains . . . 389
Planning the braking system . . . 389
    Selecting the brake resistor . . . 389
    Selecting the brake resistor cables . . . 391
    Placing the brake resistor . . . 392
    Protecting the system in brake circuit fault situations . . . 392
Electrical installation . . . 392
Start-up . . . 392

20. Appendix: Extension modules

What this chapter contains . . . 393
Extension modules . . . 393
    Description . . . 393
    Installation . . . 394
    Technical data . . . 396
MTAC-01 pulse encoder interface module . . . 396
MREL-01 output relay module . . . 396
MPOW-01 auxiliary power module . . . 397
    Description . . . 397
    Electrical installation . . . 397
    Technical data . . . 398

21. Appendix: Safe torque off (STO)

What this appendix contains . . . 399
Basics . . . 399
Program features, settings and diagnostics . . . 400
    Operation of the STO function and its diagnostics function . . . 400
STO status indications . . . 401
    STO function activation and indication delays . . . 402
Installation . . . 402
Start-up and commissioning . . . 403
Technical data . . . 403
    STO components . . . 403

Data related to safety standards 404
Abbreviations 404
Maintenance 404

Further information

Product and service inquiries 405
Product training 405
Providing feedback on ABB Drives manuals 405
Document library on the Internet 405

1

Safety

What this chapter contains

The chapter contains safety instructions which you must follow when installing, operating and servicing the drive. If ignored, physical injury or death may follow, or damage may occur to the drive, motor or driven equipment. Read the safety instructions before you work on the drive.

Use of warnings

Warnings caution you about conditions which can result in serious injury or death and/or damage to the equipment, and advise on how to avoid the danger. The following warning symbols are used in this manual:

Electricity warning warns of hazards from electricity which can cause physical injury and/or damage to the equipment.

General warning warns about conditions, other than those caused by electricity, which can result in physical injury and/or damage to the equipment.

Safety in installation and maintenance

These warnings are intended for all who work on the drive, motor cable or motor.

■ Electrical safety

WARNING! Ignoring the following instructions can cause physical injury or death, or damage to the equipment.

Only qualified electricians are allowed to install and maintain the drive!

- Never work on the drive, motor cable or motor when input power is applied. After disconnecting the input power, always wait for 5 minutes to let the intermediate circuit capacitors discharge before you start working on the drive, motor or motor cable.

  Always ensure by measuring with a multimeter (impedance at least 1 Mohm) that
  1. there is no voltage between the drive input phases U1, V1 and W1 and the ground
  2. there is no voltage between terminals BRK+ and BRK- and the ground.
- Do not work on the control cables when power is applied to the drive or to the external control circuits. Externally supplied control circuits may carry dangerous voltage even when the input power of the drive is switched off.
- Do not make any insulation or voltage withstand tests on the drive.
- Disconnect the internal EMC filter when installing the drive on an IT system (an ungrounded power system or a high-resistance-grounded [over 30 ohms] power system), otherwise the system will be connected to ground potential through the EMC filter capacitors. This may cause danger or damage the drive. See page *48*. **Note:** When the internal EMC filter is disconnected, the drive is not EMC compatible without an external filter.
- Disconnect the internal EMC filter when installing the drive on a corner-grounded TN system, otherwise the drive will be damaged. See page *48*. **Note:** When the internal EMC filter is disconnected, the drive is not EMC compatible without an external filter.
- All ELV (extra low voltage) circuits connected to the drive must be used within a zone of equipotential bonding, ie within a zone where all simultaneously accessible conductive parts are electrically connected to prevent hazardous voltages appearing between them. This is accomplished by a proper factory grounding.

Note:

- Even when the motor is stopped, dangerous voltage is present at the power circuit terminals U1, V1, W1 and U2, V2, W2 and BRK+ and BRK-.

Permanent magnet motor drives

These are additional warnings concerning permanent magnet motor drives. Ignoring the instructions can cause physical injury or death, or damage to the equipment.

WARNING! Do not work on the drive when the permanent magnet motor is rotating. Also, when the supply power is switched off and the inverter is stopped, a rotating permanent magnet motor feeds power to the intermediate circuit of the drive and the supply connections become live.

Before installation and maintenance work on the drive:

- Stop the motor.
- Ensure that there is no voltage on the drive power terminals according to step 1 or 2, or if possible, according to the both steps.
  1. Disconnect the motor from the drive with a safety switch or by other means. Measure that there is no voltage present on the drive input or output terminals (U1, V1, W1, U2, V2, W2, BRK+, BRK-).
  2. Ensure that the motor cannot rotate during work. Make sure that no other system, like hydraulic crawling drives, is able to rotate the motor directly or through any mechanical connection like felt, nip, rope, etc. Measure that there is no voltage present on the drive input or output terminals (U1, V1, W1, U2, V2, W2, BRK+, BRK-). Ground the drive output terminals temporarily by connecting them together as well as to the PE.

■ General safety

WARNING! Ignoring the following instructions can cause physical injury or death, or damage to the equipment.

- The drive is not field repairable. Never attempt to repair a malfunctioning drive; contact your local ABB representative or Authorized Service Center for replacement.
- Make sure that dust from drilling does not enter the drive during the installation. Electrically conductive dust inside the drive may cause damage or lead to malfunction.
- Ensure sufficient cooling.

Safe start-up and operation

These warnings are intended for all who plan the operation, start up or operate the drive.

■ Electrical safety

Permanent magnet motor drives

These warnings concern permanent magnet motor drives. Ignoring the instructions can cause physical injury or death, or damage to the equipment.

WARNING! It is not recommended to run the permanent magnet motor over 1.2 times the rated speed. Motor overspeed may lead to overvoltage which may permanently damage the drive.

■ General safety

WARNING! Ignoring the following instructions can cause physical injury or death, or damage to the equipment.

- Before adjusting the drive and putting it into service, make sure that the motor and all driven equipment are suitable for operation throughout the speed range provided by the drive. The drive can be adjusted to operate the motor at speeds above and below the speed provided by connecting the motor directly to the power line.
- Do not activate automatic fault reset functions if dangerous situations can occur. When activated, these functions will reset the drive and resume operation after a fault.
- Do not control the motor with an AC contactor or disconnecting device (disconnecting means); use instead the control panel start and stop keys and or external commands (I/O or fieldbus). The maximum allowed number of charging cycles of the DC capacitors (ie power-ups by applying power) is two per minute and the maximum total number of chargings is 15 000.

Note:

- If an external source for start command is selected and it is ON, the drive will start immediately after an input voltage break or fault reset unless the drive is configured for 3-wire (a pulse) start/stop.
- When the control location is not set to local (LOC not shown on the display), the stop key on the control panel will not stop the drive. To stop the drive using the control panel, first press the LOC/REM key and then the stop key .

2

Introduction to the manual

What this chapter contains

The chapter describes applicability, target audience and purpose of this manual. It describes the contents of this manual and refers to a list of related manuals for more information. The chapter also contains a flowchart of steps for checking the delivery, installing and commissioning the drive. The flowchart refers to chapters/sections in this manual.

Applicability

The manual is applicable to the ACS355 drive firmware version 5.02b or later. See parameter *3301 FIRMWARE* on page *250*.

Target audience

The reader is expected to know the fundamentals of electricity, wiring, electrical components and electrical schematic symbols.

The manual is written for readers worldwide. Both SI and imperial units are shown. Special US instructions for installations in the United States are given.

Purpose of the manual

This manual provides information needed for planning the installation, installing, commissioning, using and servicing the drive.

Contents of this manual

The manual consists of the following chapters:

- *Safety* (page *17*) gives safety instructions you must follow when installing, commissioning, operating and servicing the drive.
- *Introduction to the manual* (this chapter, page *21*) describes applicability, target audience, purpose and contents of this manual. It also contains a quick installation and commissioning flowchart.
- *Operation principle and hardware description* (page *25*) describes the operation principle, layout, power connections and control interfaces, type designation label and type designation information in short.
- *Mechanical installation* (page *31*) tells how to check the installation site, unpack, check the delivery and install the drive mechanically.
- *Planning the electrical installation* (page *37*) tells how to check the compatibility of the motor and the drive and select cables, protections and cable routing.
- *Electrical installation* (page *47*) tells how to check the insulation of the assembly and the compatibility with IT (ungrounded) and corner-grounded TN systems as well as connect power cables and control cables.
- *Installation checklist* (page *57*) contains a checklist for checking the mechanical and electrical installation of the drive.
- *Start-up, control with I/O and ID run* (page *59*) tells how to start up the drive as well as how to start, stop, change the direction of the motor rotation and adjust the motor speed through the I/O interface.
- *Control panels* (page *73*) describes the control panel keys, LED indicators and display fields and tells how to use the panel for control, monitoring and changing the settings.
- *Application macros* (page *109*) gives a brief description of each application macro together with a wiring diagram showing the default control connections. It also explains how to save a user macro and how to recall it.
- *Program features* (page *121*) describes program features with lists of related user settings, actual signals, and fault and alarm messages.
- *Actual signals and parameters* (page *175*) describes actual signals and parameters. It also lists the default values for the different macros.
- *Fieldbus control with embedded fieldbus* (page *301*) tells how the drive can be controlled by external devices over a communication network using embedded fieldbus.
- *Fieldbus control with fieldbus adapter* (page *325*) tells how the drive can be controlled by external devices over a communication network using a fieldbus adapter.
- *Fault tracing* (page *335*) tells how to reset faults and view fault history. It lists all alarm and fault messages including the possible cause and corrective actions.

- *Maintenance and hardware diagnostics* (page *353*) contains preventive maintenance instructions and LED indicator descriptions.
- *Technical data* (page *357*) contains technical specifications of the drive, eg ratings, sizes and technical requirements as well as provisions for fulfilling the requirements for CE and other marks.
- *Dimension drawings* (page *379*) shows dimension drawings of the drive.
- *Appendix: Resistor braking* (page *389*) tells how to select the brake resistor.
- *Appendix: Extension modules* (page *393*) describes the MPOW-01 auxiliary power extension module. It mentions the MREL-01 relay output extension module and MTAC-01 pulse encoder interface module briefly; readers are referred to the corresponding user's manual.
- *Appendix: Safe torque off (STO)* (page *399*) describes STO features, installation and technical data.
- *Further information* (inside of the back cover, page *405*) tells how to make product and service inquiries, get information on product training, provide feedback on ABB Drives manuals and find documents on the Internet.

Related documents

See *List of related manuals* on page *2* (inside of the front cover).

Categorization by frame size

The ACS355 is manufactured in frame sizes R0…R4. Some instructions and other information which only concern certain frame sizes are marked with the symbol of the frame size (R0…R4). To identify the frame size of your drive, see the table in section *Ratings* on page *358*.

Quick installation and commissioning flowchart

Task	See
Identify the frame size of your drive: R0…R4.	*Operation principle and hardware description*: *Type designation key* on page *29* *Technical data*: *Ratings* on page *358*
Plan the installation: select the cables, etc. Check the ambient conditions, ratings and required cooling air flow.	*Planning the electrical installation* on page *37* *Technical data* on page *357*
Unpack and check the drive.	*Mechanical installation: Unpacking* on page *33*
If the drive will be connected to an IT (ungrounded) or corner-grounded system, check that the internal EMC filter is not connected.	*Operation principle and hardware description*: *Type designation key* on page *29* *Electrical installation*: *Checking the compatibility with IT (ungrounded) and corner-grounded TN systems* on page *48*
Install the drive on a wall or in a cabinet.	*Mechanical installation* on page *31*
Route the cables.	*Planning the electrical installation*: *Routing the cables* on page *41*
Check the insulation of the input cable and the motor and the motor cable.	*Electrical installation*: *Checking the insulation of the assembly* on page *47*
Connect the power cables.	*Electrical installation*: *Connecting the power cables* on page *49*
Connect the control cables.	*Electrical installation*: *Connecting the control cables* on page *51*
Check the installation.	*Installation checklist* on page *57*
Commission the drive.	*Start-up, control with I/O and ID run* on page *59*

3

Operation principle and hardware description

What this chapter contains

The chapter briefly describes the operation principle, layout, type designation label and type designation information. It also shows a general diagram of power connections and control interfaces.

Operation principle

The ACS355 is a wall or cabinet mountable drive for controlling asynchronous AC induction motors and permanent magnet synchronous motors.

The figure below shows the simplified main circuit diagram of the drive. The rectifier converts three-phase AC voltage to DC voltage. The capacitor bank of the intermediate circuit stabilizes the DC voltage. The inverter converts the DC voltage back to AC voltage for the AC motor. The brake chopper connects the external brake resistor to the intermediate DC circuit when the voltage in the circuit exceeds its maximum limit.

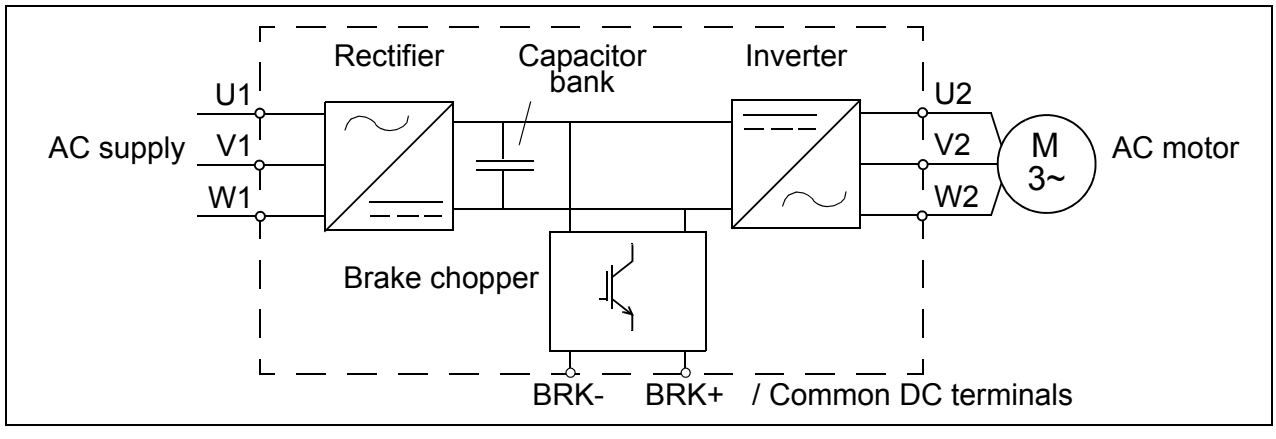

Product overview

Layout

The layout of the drive is presented below. The construction of the different frame sizes R0…R4 varies to some extent.

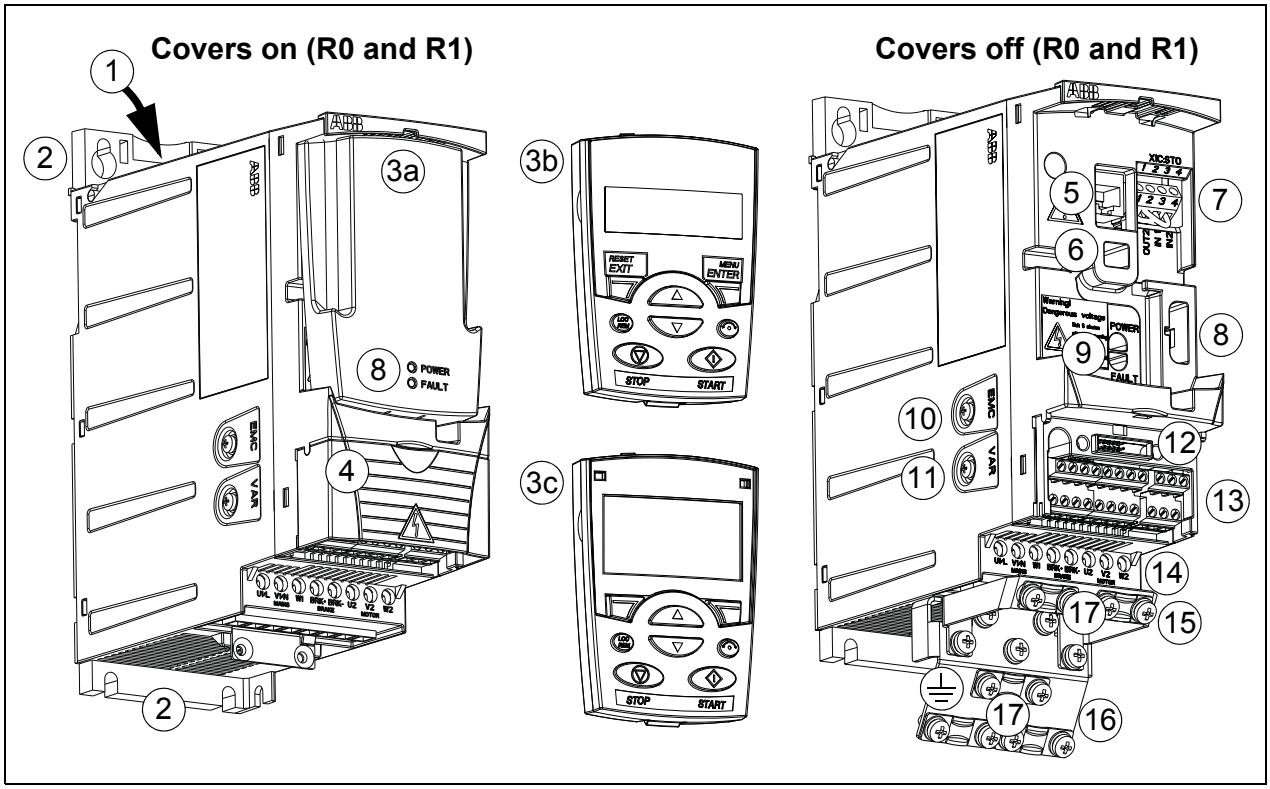

1	Cooling outlet through top cover
2	Mounting holes
3	Panel cover (a) / basic control panel (b) / assistant control panel (c)
4	Terminal cover (or optional potentiometer unit MPOT-01)
5	Panel connection
6	Option connection
7	STO (Safe torque off) connection
8	FlashDrop connection
9	Power OK and Fault LEDs. See section *LEDs* on page *356*.

10	EMC filter grounding screw (EMC). **Note:** The screw is on the front in frame size R4.
11	Varistor grounding screw (VAR)
12	Fieldbus adapter (serial communication) connection
13	I/O connections
14	Input power connection (U1, V1, W1), brake resistor connection (BRK+, BRK-) and motor connection (U2, V2, W2).
15	I/O clamping plate
16	Clamping plate
17	Clamps

Power connections and control interfaces

The diagram gives an overview of connections. I/O connections are parameterable. See chapter *Application macros* on page *109* for I/O connections for the different macros and chapter *Electrical installation* on page *47* for installation in general.

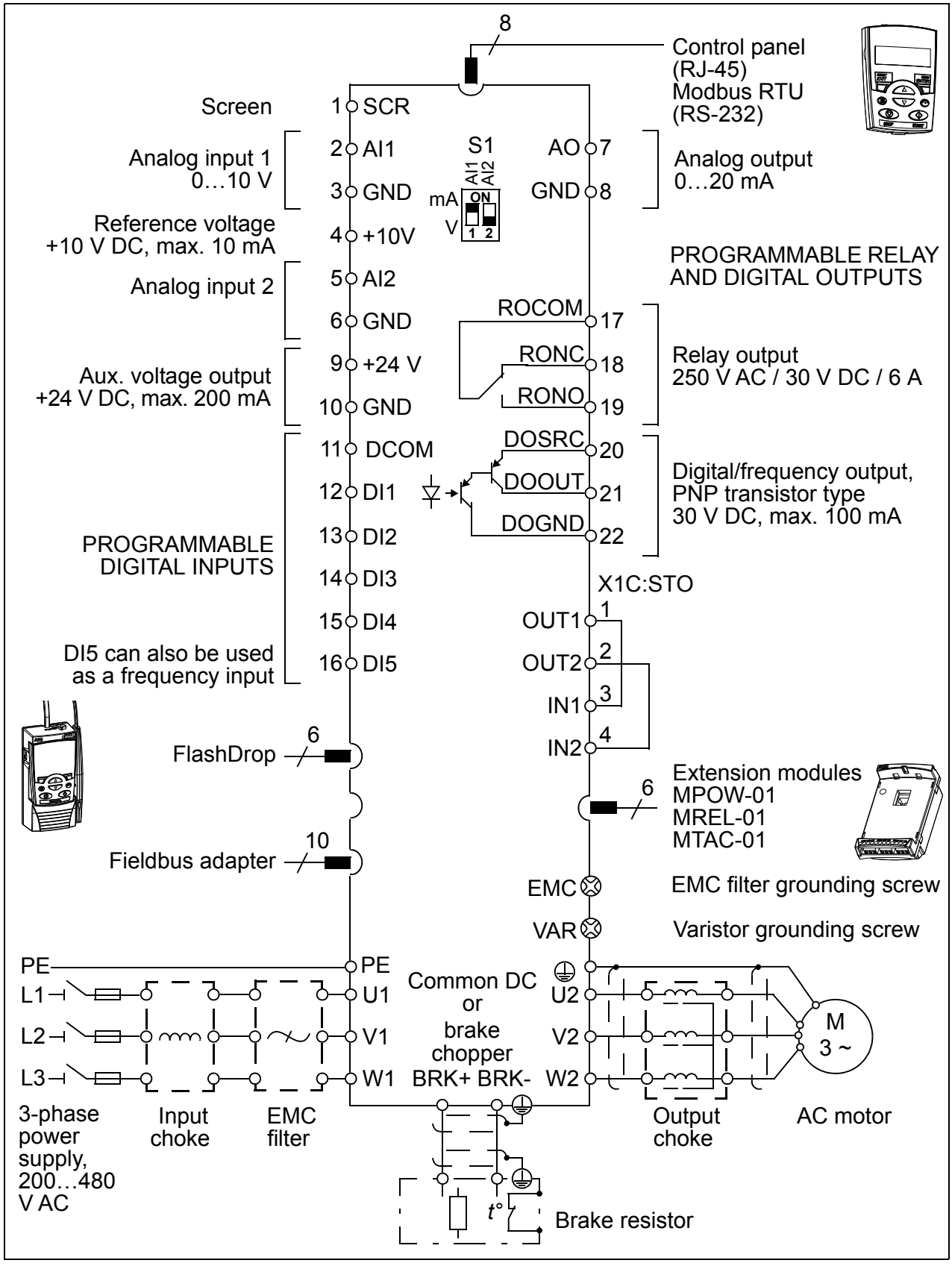

Type designation label

The type designation label is attached to the left side of the drive. An example label and explanation of the label contents are shown below.

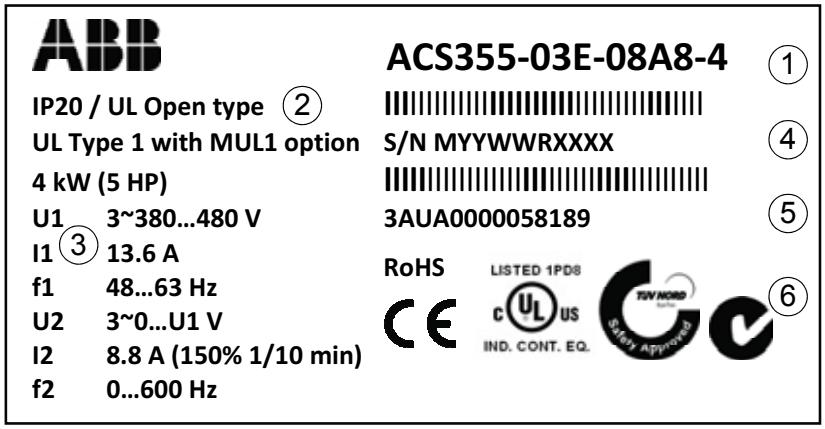

1	Type designation, see section *Type designation key* on page *29*
2	Degree of protection by enclosure (IP and UL/NEMA)
3	Nominal ratings, see section *Ratings* on page *358*.
4	Serial number of format MYYWWRXXXX, where M: Manufacturer YY: 09, 10, 11, … for 2009, 2010, 2011, … WW: 01, 02, 03, … for week 1, week 2, week 3, … R: A, B, C, … for product revision number XXXX: Integer starting every week from 0001
5	ABB MRP code of the drive
6	CE marking and C-Tick, C-UL US, RoHS and TÜV NORD marks (the label of your drive shows the valid markings)

Type designation key

The type designation contains information on the specifications and configuration of the drive. You find the type designation on the type designation label attached to the drive. The first digits from the left express the basic configuration, for example ACS355-03E-09A7-4. The optional selections are given after that, separated by + signs, for example +J404. The explanations of the type designation selections are described below.

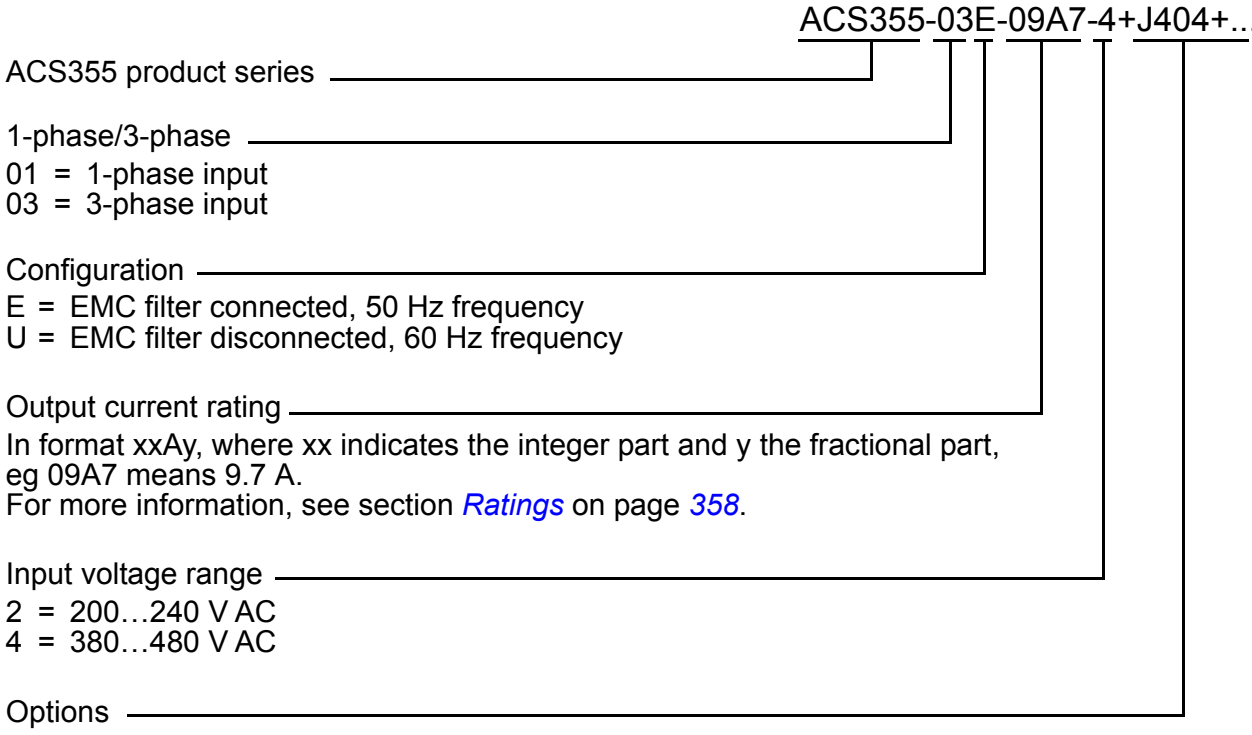

B063 = IP66/IP67/UL Type 4x enclosure (product variant)
J400 = ACS-CP-A assistant control panel [1)]
J404 = ACS-CP-C basic control panel [1)]
J402 = MPOT-01 potentiometer
K451 = FDNA-01 DeviceNet
K454 = FPBA-01 PROFIBUS DP
K457 = FCAN-01 CANopen
K458 = FMBA-01 Modbus RTU
K466 = FENA-01 EtherNet/IP / Modbus TCP/IP
K452 = FLON-01 LonWorks
K469 = FECA-01 EtherCAT
H376 = Cable gland kit (IP66/IP67/UL Type 4x)
F278 = Input switch kit
C169 = Pressure compensation valve

Extension modules
G406 = MPOW-01 auxiliary power module
L502 = MTAC-01 pulse encoder module
L511 = MREL-01 relay output module

1) The ACS355 is compatible with panels that have the following panel revisions and panel firmware versions. To find out the revision and firmware version of your panel, see page 74.

Panel type	Type code	Panel revision	Panel firmware version
Basic control panel	ACS-CP-C	M or later	1.13 or later
Assistant control panel	ACS-CP-A	F or later	2.04 or later
Assistant control panel (Asia)	ACS-CP-D	Q or later	2.04 or later

Note that unlike the other panels, the ACS-CP-D is ordered with a separate material code.

4

Mechanical installation

What this chapter contains

The chapter tells how to check the installation site, unpack, check the delivery and install the drive mechanically.

Checking the installation site

The drive may be installed on the wall or in a cabinet. Check the enclosure requirements for the need to use the NEMA 1 option in wall installations (see chapter *Technical data* on page *357*).

The drive can be installed in three different ways, depending on the frame size:

a) back mounting (all frame sizes)

b) side mounting (frame sizes R0…R2)

c) DIN rail mounting (all frame sizes).

The drive must be installed in an upright position.

Check the installation site according to the requirements below. Refer to chapter *Dimension drawings* on page *379* for frame details.

Requirements for the installation site

Operation conditions

See chapter *Technical data* on page *357* for the allowed operation conditions of the drive.

Wall

The wall should be as close to vertical and even as possible, of non-flammable material and strong enough to carry the weight of the drive.

Floor

The floor/material below the installation should be non-flammable.

Free space around the drive

The required free space for cooling above and below the drive is 75 mm (3 in). No free space is required on the sides of the drive, so drives can be mounted immediately next to each other.

Required tools

To install the drive, you need the following tools:

- screwdrivers (as appropriate for the mounting hardware used)
- wire stripper
- tape measure
- drill (if the drive will be installed with screws/bolts)
- mounting hardware: screws or bolts (if the drive will be installed with screws/bolts). For the number of screws/bolts, see *With screws* on page *34*.

Unpacking

The drive (1) is delivered in a package that also contains the following items (frame size R1 shown in the figure):

- plastic bag (2) including clamping plate (also used for I/O cables in frame sizes R3 and R4), I/O clamping plate (for frame sizes R0…R2), fieldbus option ground plate, clamps and screws
- panel cover (3)
- mounting template, integrated into the package (4)
- user's manual (5)
- possible options (fieldbus, potentiometer, extension module, all with instructions, basic control panel or assistant control panel).

Checking the delivery

Check that there are no signs of damage. Notify the shipper immediately if damaged components are found.

Before attempting installation and operation, check the information on the type designation label of the drive to verify that the drive is of the correct type. See section *Type designation label* on page *28*.

Installing

The instructions in this manual cover drives with the IP20 degree of protection. To comply with NEMA 1, use the MUL1-R1, MUL1-R3 or MUL1-R4 option kit, which is delivered with multilingual installation instructions (3AFE68642868, 3AFE68643147 or 3AUA0000025916, respectively).

Install the drive

Install the drive with screws or on a DIN rail as appropriate.

Note: Make sure that dust from drilling does not enter the drive during the installation.

With screws

1. Mark the hole locations using for example the mounting template cut out from the package. The locations of the holes are also shown in the drawings in chapter *Dimension drawings* on page *379*. The number and location of the holes used depend on how the drive is installed:
   a) back mounting (frame sizes R0…R4): four holes
   b) side mounting (frame sizes R0…R2): three holes; one of the bottom holes is located in the clamping plate.
2. Fix the screws or bolts to the marked locations.
3. Position the drive onto the screws on the wall.
4. Tighten the screws in the wall securely.

On DIN rail

1. Click the drive to the rail.
   To detach the drive, press the release lever on top of the drive (1b).

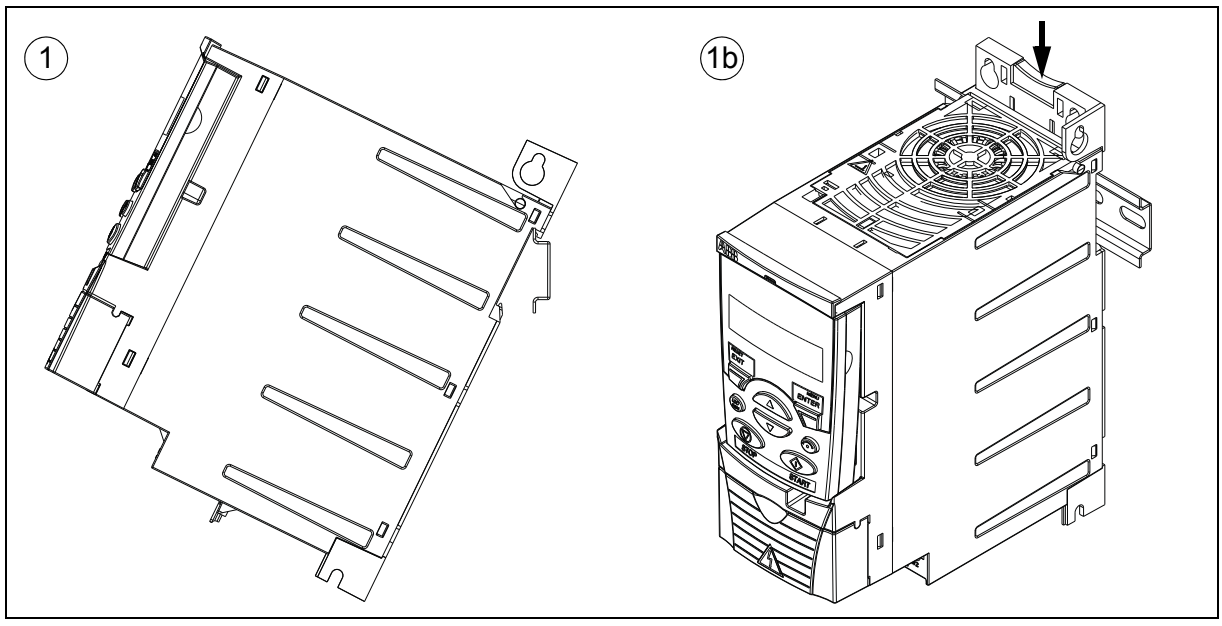

Fasten clamping plates

Note: Make sure that you do not throw the clamping plates away as they are required for proper grounding of the power and control cables as well as the fieldbus option.

1. Fasten the clamping plate (A) to the plate at the bottom of the drive with the provided screws.
2. For frame sizes R0…R2, fasten the I/O clamping plate (B) to the clamping plate with the provided screws.

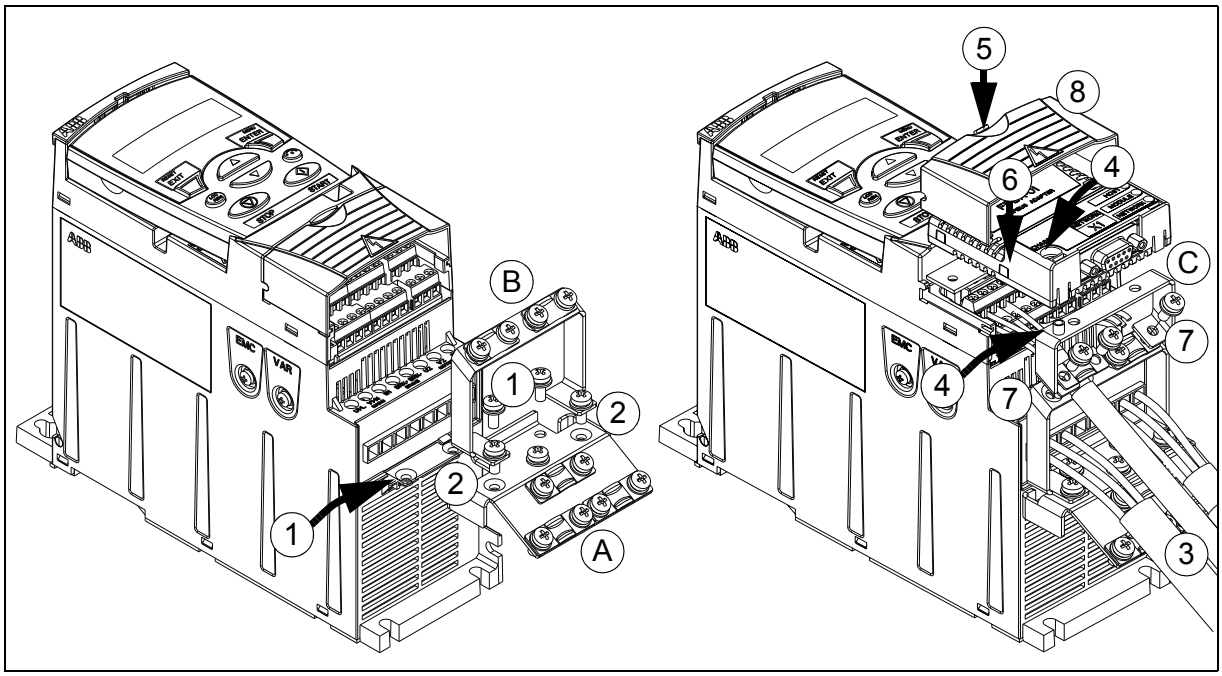

Attach the optional fieldbus module

3. Connect the power and control cables as instructed in chapter *Electrical installation* on page *47*.
4. Place the fieldbus module on the option ground plate (C) and tighten the grounding screw on the left corner of the fieldbus module. This fastens the module to the option ground plate.
5. If the terminal cover is not already removed, push the recess in the cover and simultaneously slide the cover off the frame.
6. Snap the fieldbus module attached to the option ground plate in position so that the module is plugged to the connection on the drive front and the screw holes in the option ground plate and the I/O clamping plate are aligned.
7. Fasten the option ground plate to the I/O clamping plate with the provided screws.
8. Slide the terminal cover back in place.

5

Planning the electrical installation

What this chapter contains

The chapter contains the instructions that you must follow when checking the compatibility of the motor and drive, and selecting cables, protections, cable routing and way of operation for the drive.

Note: The installation must always be designed and made according to applicable local laws and regulations. ABB does not assume any liability whatsoever for any installation which breaches the local laws and/or other regulations. Furthermore, if the recommendations given by ABB are not followed, the drive may experience problems that the warranty does not cover.

Implementing the AC power line connection

See the requirements in section *Electric power network specification* on page *367*. Use a fixed connection to the AC power line.

WARNING! As the leakage current of the device typically exceeds 3.5 mA, a fixed installation is required according to IEC 61800-5-1.

Selecting the supply disconnecting device (disconnecting means)

Install a hand-operated supply disconnecting device (disconnecting means) between the AC power source and the drive. The disconnecting device must be of a type that can be locked to the open position for installation and maintenance work.

European union

To meet the European Union Directives, according to standard EN 60204-1, Safety of Machinery, the disconnecting device must be one of the following types:

- a switch-disconnector of utilization category AC-23B (EN 60947-3)
- a disconnector having an auxiliary contact that in all cases causes switching devices to break the load circuit before the opening of the main contacts of the disconnector (EN 60947-3)
- a circuit breaker suitable for isolation in accordance with EN 60947-2.

Other regions

The disconnecting device must conform to the applicable safety regulations.

Checking the compatibility of the motor and drive

Check that the 3-phase AC induction motor and the drive are compatible according to the rating table in section *Ratings* on page *358*. The table lists the typical motor power for each drive type.

Only one permanent magnet synchronous motor can be connected to the inverter output.

Selecting the power cables

General rules

Dimension the input power and motor cables **according to local regulations**.

- The input power and the motor cables must be able to carry the corresponding load currents. See section *Ratings* on page *358* for the rated currents.
- The cable must be rated for at least 70 °C maximum permissible temperature of the conductor in continuous use. For US, see section *Additional US requirements* on page *40*.
- The conductivity of the PE conductor must be equal to that of the phase conductor (same cross-sectional area).
- 600 V AC cable is accepted for up to 500 V AC.
- Refer to chapter *Technical data* on page *357* for the EMC requirements.

A symmetrical shielded motor cable (see the figure below) must be used to meet the EMC requirements of the CE and C-Tick marks.

A four-conductor system is allowed for input cabling, but a shielded symmetrical cable is recommended.

Compared to a four-conductor system, the use of a symmetrical shielded cable reduces electromagnetic emission of the whole drive system as well as motor bearing currents and wear.

Alternative power cable types

Power cable types that can be used with the drive are presented below.

Motor cables

(recommended for input cables also)

Symmetrical shielded cable: three phase conductors, a concentric or otherwise symmetrically constructed PE conductor and a shield

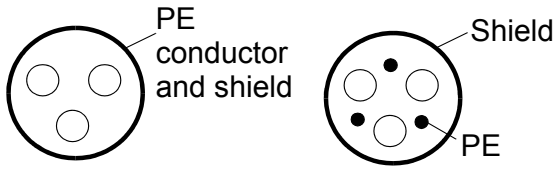

Note: A separate PE conductor is required if the conductivity of the cable shield is not sufficient for the purpose.

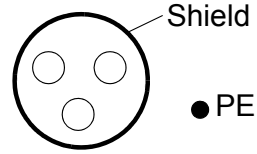

Allowed as input cables

A four-conductor system: three phase conductors and a protective conductor

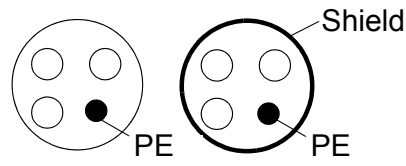

Motor cable shield

To function as a protective conductor, the shield must have the same cross-sectional area as the phase conductors when they are made of the same metal.

To effectively suppress radiated and conducted radio-frequency emissions, the shield conductivity must be at least 1/10 of the phase conductor conductivity. The requirements are easily met with a copper or aluminium shield. The minimum requirement of the motor cable shield of the drive is shown below. It consists of a concentric layer of copper wires. The better and tighter the shield, the lower the emission level and bearing currents.

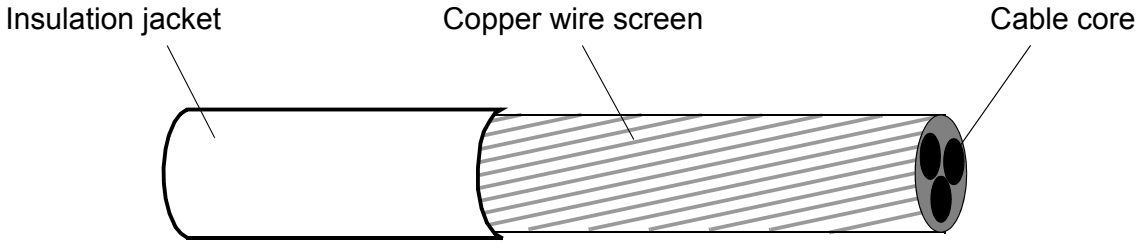

Additional US requirements

Type MC continuous corrugated aluminium armor cable with symmetrical grounds or shielded power cable is recommended for the motor cables if metallic conduit is not used.

The power cables must be rated for 75 °C (167 °F).

Conduit

Where conduits must be coupled together, bridge the joint with a ground conductor bonded to the conduit on each side of the joint. Bond the conduits also to the drive enclosure. Use separate conduits for input power, motor, brake resistors and control wiring. Do not run motor wiring from more than one drive in the same conduit.

Armored cable / shielded power cable

Six-conductor (three phases and three ground) type MC continuous corrugated aluminium armor cable with symmetrical grounds is available from the following suppliers (trade names in parentheses):

- Anixter Wire & Cable (Philsheath)
- BICC General Corp (Philsheath)
- Rockbestos Co. (Gardex)
- Oaknite (CLX).

Shielded power cable is available from the following suppliers:

- Belden
- LAPPKABEL (ÖLFLEX)
- Pirelli.

Selecting the control cables

General rules

All analog control cables and the cable used for the frequency input must be shielded.

Use a double-shielded twisted pair cable (Figure a, for example JAMAK by Draka NK Cables) for analog signals. Employ one individually shielded pair for each signal. Do not use common return for different analog signals.

A double-shielded cable is the best alternative for low-voltage digital signals, but a single-shielded or unshielded twisted multipair cable (Figure b) is also usable. However, for frequency input, always use a shielded cable.

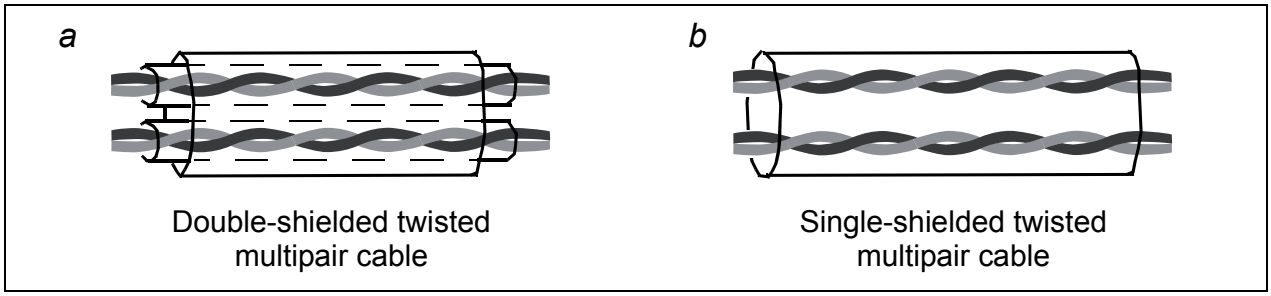

Run analog and digital signals in separate cables.

Relay-controlled signals, providing their voltage does not exceed 48 V, can be run in the same cables as digital input signals. It is recommended that the relay-controlled signals are run as twisted pairs.

Never mix 24 V DC and 115/230 V AC signals in the same cable.

Relay cable

The cable type with braided metallic screen (for example ÖLFLEX by LAPPKABEL) has been tested and approved by ABB.

Control panel cable

In remote use, the cable connecting the control panel to the drive must not exceed 3 m (10 ft). The cable type tested and approved by ABB is used in control panel option kits.

Routing the cables

Route the motor cable away from other cable routes. Motor cables of several drives can be run in parallel installed next to each other. It is recommended that the motor cable, input power cable and control cables are installed on separate trays. Avoid long parallel runs of motor cables with other cables to decrease electromagnetic interference caused by the rapid changes in the drive output voltage.

Where control cables must cross power cables make sure that they are arranged at an angle as near to 90 degrees as possible.

The cable trays must have good electrical bonding to each other and to the grounding electrodes. Aluminium tray systems can be used to improve local equalizing of potential.

A diagram of the cable routing is shown below.

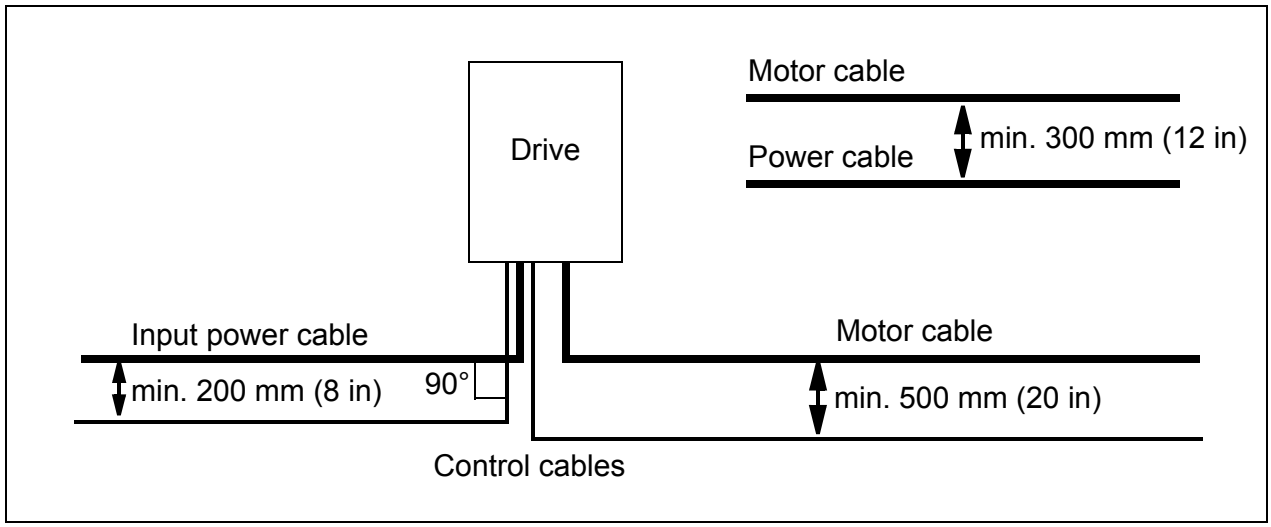

Control cable ducts

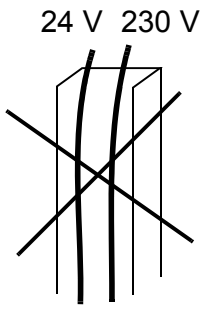

Not allowed unless the 24 V cable is insulated for 230 V or insulated with an insulation sleeving for 230 V.

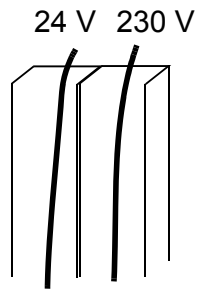

Lead 24 V and 230 V control cables in separate ducts inside the cabinet.

Protecting the drive, input power cable, motor and motor cable in short circuit situations and against thermal overload

Protecting the drive and input power cable in short-circuit situations

Arrange the protection according to the following guidelines.

Circuit diagram	Short-circuit protection
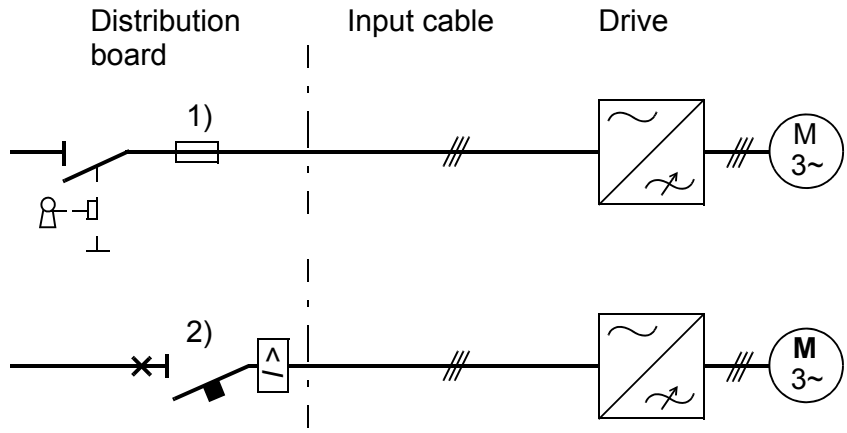	Protect the drive and input cable with fuses or a circuit breaker. See footnotes 1) and 2).

1) Size the fuses according to instructions given in chapter *Technical data* on page *357*. The fuses will protect the input cable in short-circuit situations, restrict drive damage and prevent damage to adjoining equipment in case of a short-circuit inside the drive.

2) Circuit breakers which have been tested by ABB with the ACS350 can be used. Fuses must be used with other circuit breakers. Contact your local ABB representative for the approved breaker types and supply network characteristics.

WARNING! Due to the inherent operating principle and construction of circuit breakers, independent of the manufacturer, hot ionized gases may escape from the breaker enclosure in case of a short-circuit. To ensure safe use, special attention must be paid to the installation and placement of the breakers. Follow the manufacturer's instructions.

Protecting the motor and motor cable in short-circuit situations

The drive protects the motor and motor cable in a short-circuit situation when the motor cable is dimensioned according to the nominal current of the drive. No additional protection devices are needed.

Protecting the drive, motor cable and input power cable against thermal overload

The drive protects itself and the input and motor cables against thermal overload when the cables are dimensioned according to the nominal current of the drive. No additional thermal protection devices are needed.

WARNING! If the drive is connected to multiple motors, a separate thermal overload switch or a circuit breaker must be used for protecting each cable and motor. These devices may require a separate fuse to cut off the short-circuit current.

Protecting the motor against thermal overload

According to regulations, the motor must be protected against thermal overload and the current must be switched off when overload is detected. The drive includes a motor thermal protection function that protects the motor and switches off the current when necessary. It is also possible to connect a motor temperature measurement to the drive. The user can tune both the thermal model and the temperature measurement function further by parameters.

The most common temperature sensors are:

- motor sizes IEC180…225: thermal switch (for example Klixon)
- motor sizes IEC200…250 and larger: PTC or Pt100.

For more information on the thermal model, see section *Motor thermal protection* on page *145*. For more information on the temperature measurement function, see section *Motor temperature measurement through the standard I/O* on page *155*.

Implementing the Safe torque off (STO) function

See *Appendix: Safe torque off (STO)* on page *399*.

Using residual current devices (RCD) with the drive

ACS355-01x drives are suitable to be used with residual current devices of Type A, ACS355-03x drives with residual current devices of Type B. For ACS355-03x drives, other measures for protection in case of direct or indirect contact, such as separation from the environment by double or reinforced insulation or isolation from the supply system by a transformer, can also be applied.

Using a safety switch between the drive and the motor

It is recommended to install a safety switch between the permanent magnet motor and the drive output.This is needed to isolate the motor from the drive during maintenance work on the drive.

Implementing a bypass connection

WARNING! Never connect the supply power to the drive output terminals U2, V2 and W2. Power line voltage applied to the output can result in permanent damage to the drive.

If frequent bypassing is required, employ mechanically connected switches or contactors to ensure that the motor terminals are not connected to the AC power line and drive output terminals simultaneously.

Protecting the contacts of relay outputs

Inductive loads (relays, contactors, motors) cause voltage transients when switched off.

Equip inductive loads with noise attenuating circuits (varistors, RC filters [AC] or diodes [DC]) in order to minimize the EMC emission at switch-off. If not suppressed, the disturbances may connect capacitively or inductively to other conductors in the control cable and form a risk of malfunction in other parts of the system.

Install the protective component as close to the inductive load as possible. Do not install protective components at the I/O terminal block.

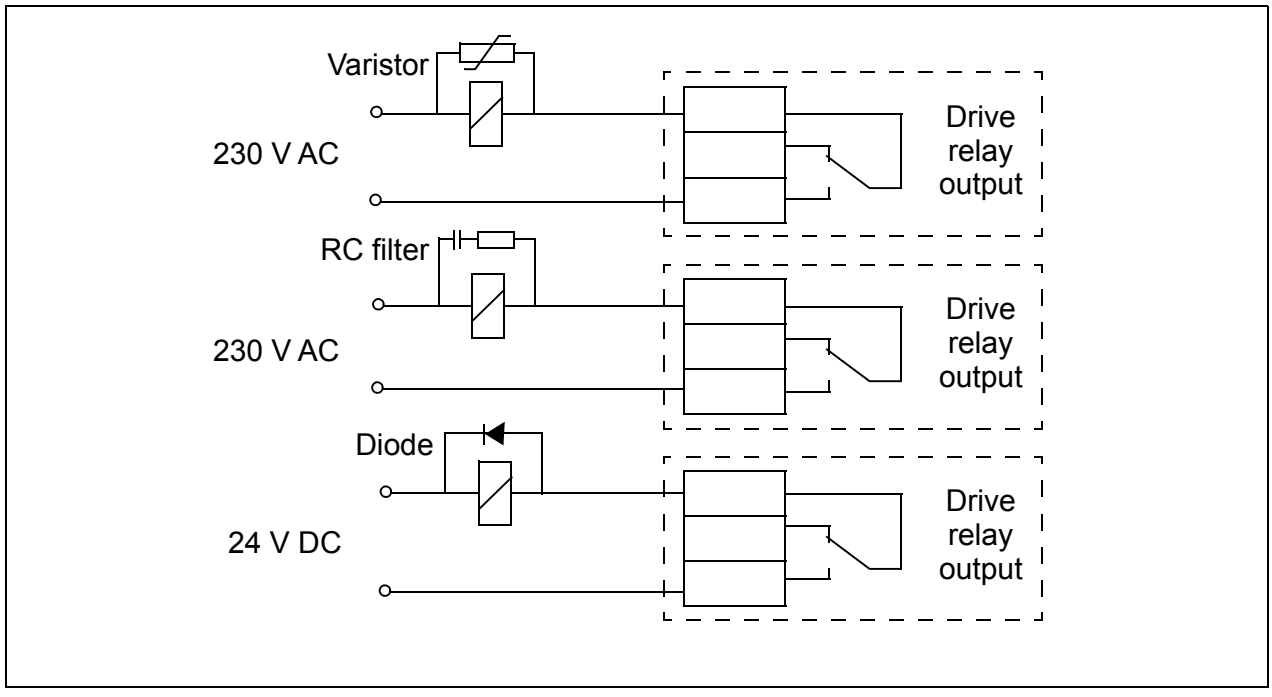

6

Electrical installation

What this chapter contains

The chapter tells how to check the insulation of the assembly and the compatibility with IT (ungrounded) and corner-grounded TN systems as well as connect power cables and control cables.

WARNING! The work described in this chapter may only be carried out by a qualified electrician. Follow the instructions in chapter *Safety* on page *17*. Ignoring the safety instructions can cause injury or death.

Make sure that the drive is disconnected from the input power during installation. If the drive is already connected to the input power, wait for 5 minutes after disconnecting the input power.

Checking the insulation of the assembly

Drive

Do not make any voltage tolerance or insulation resistance tests (for example hi-pot or megger) on any part of the drive as testing can damage the drive. Every drive has been tested for insulation between the main circuit and the chassis at the factory. Also, there are voltage-limiting circuits inside the drive which cut down the testing voltage automatically.

Input power cable

Check the insulation of the input power cable according to local regulations before connecting to the drive.

Motor and motor cable

Check the insulation of the motor and motor cable as follows:

1. Check that the motor cable is connected to the motor and disconnected from the drive output terminals U2, V2 and W2.
2. Measure the insulation resistance between each phase conductor and the Protective Earth conductor using a measuring voltage of 500 V DC. The insulation resistance of an ABB motor must exceed 100 Mohm (reference value at 25 °C or 77 °F). For the insulation resistance of other motors, please consult the manufacturer's instructions.
   Note: Moisture inside the motor casing will reduce the insulation resistance. If moisture is suspected, dry the motor and repeat the measurement.

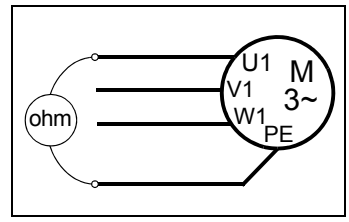

Checking the compatibility with IT (ungrounded) and corner-grounded TN systems

WARNING! Disconnect the internal EMC filter when installing the drive on an IT system (an ungrounded power system or a high-resistance-grounded [over 30 ohms] power system), otherwise the system will be connected to ground potential through the EMC filter capacitors. This may cause danger or damage the drive.

Disconnect the internal EMC filter when installing the drive on a corner-grounded TN system, otherwise the drive will be damaged

Note: When the internal EMC filter is disconnected, the drive is not EMC compatible without an external filter.

1. If you have an IT (ungrounded) or corner-grounded TN system, disconnect the internal EMC filter by removing the EMC screw. For 3-phase U-type drives (with type designation ACS355-03U-), the EMC screw is already removed at the factory and replaced by a plastic one.

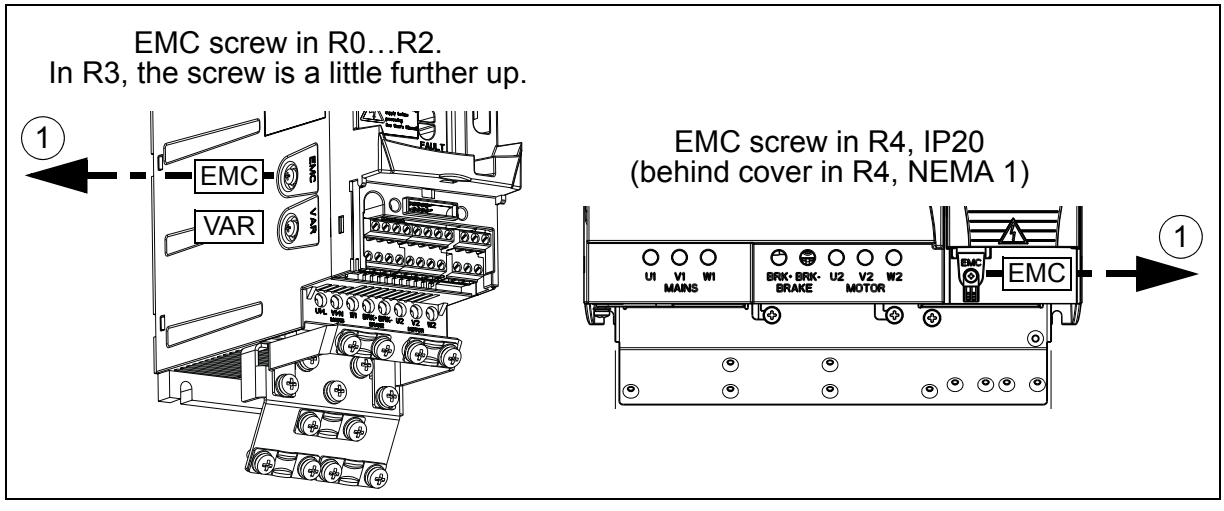

Connecting the power cables

Connection diagram

For alternatives, see section *Selecting the supply disconnecting device (disconnecting means)* on page *37*.

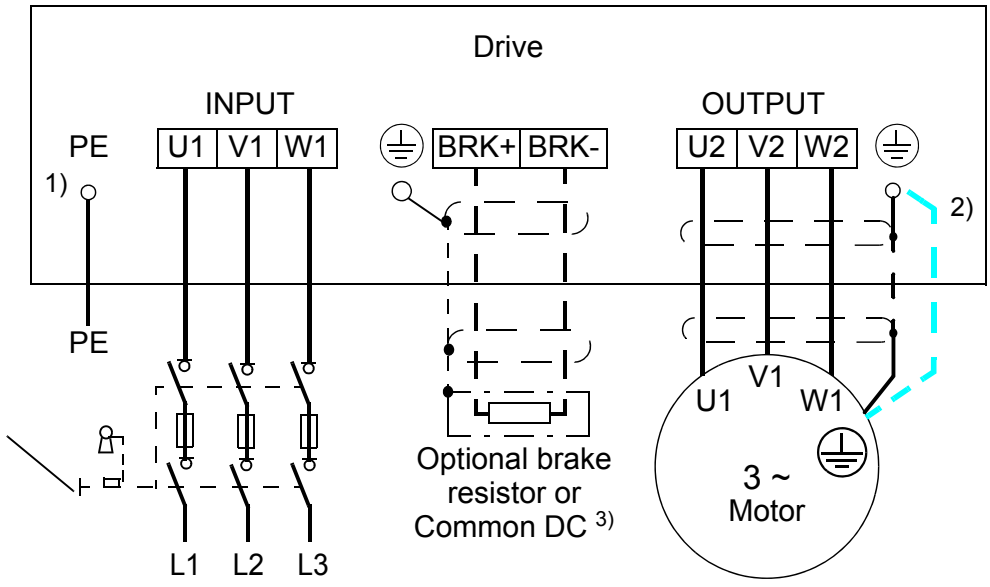

1) Ground the other end of the PE conductor at the distribution board.

2) Use a separate grounding cable if the conductivity of the cable shield is insufficient (smaller than the conductivity of the phase conductor) and there is no symmetrically constructed grounding conductor in the cable. See section *Selecting the power cables* on page *38*.

3) For more information on Common DC, see *ACS355 Common DC application guide* (3AUA0000070130 [EN]).

Note:

Do not use an asymmetrically constructed motor cable.

If there is a symmetrically constructed grounding conductor in the motor cable in addition to the conductive shield, connect the grounding conductor to the grounding terminal at the drive and motor ends.

Route the motor cable, input power cable and control cables separately. For more information, see section *Routing the cables* on page *41*.

Grounding of the motor cable shield at the motor end

For minimum radio frequency interference:

- ground the cable by twisting the shield as follows: flattened width ≥ 1/5 · length
- or ground the cable shield 360 degrees at the lead-through of the motor terminal box.

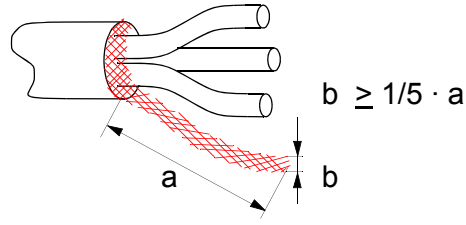

Connection procedure

1. Fasten the grounding conductor (PE) of the input power cable under the grounding clamp. Connect the phase conductors to the U1, V1 and W1 terminals. Use a tightening torque of 0.8 N·m (7 lbf·in) for frame sizes R0…R2, 1.7 N·m (15 lbf·in) for R3 and 2.5 N·m (22 lbf·in) for R4.
2. Strip the motor cable and twist the shield to form as short a pigtail as possible. Fasten the twisted shield under the grounding clamp. Connect the phase conductors to the U2, V2 and W2 terminals. Use a tightening torque of 0.8 N·m (7 lbf·in) for frame sizes R0…R2, 1.7 N·m (15 lbf·in) for R3 and 2.5 N·m (22 lbf·in) for R4.
3. Connect the optional brake resistor to the BRK+ and BRK- terminals with a shielded cable using the same procedure as for the motor cable in the previous step.
4. Secure the cables outside the drive mechanically.

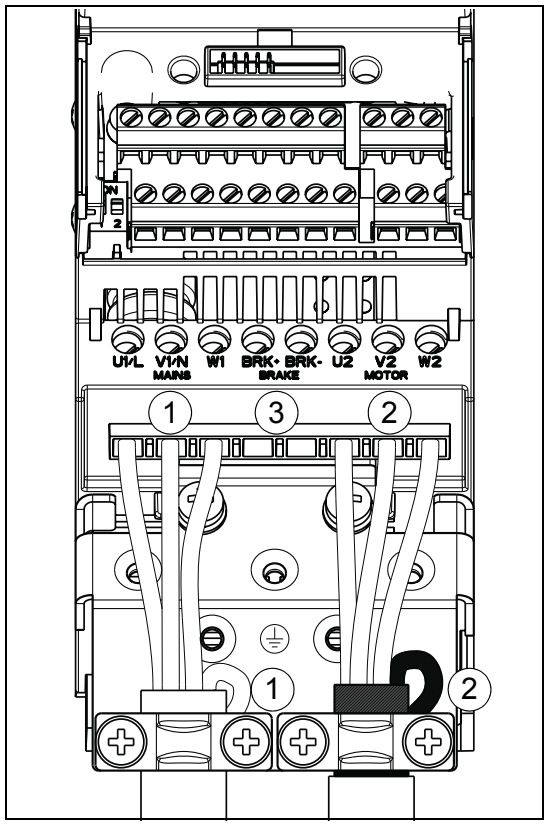

Connecting the control cables

I/O terminals

The figure below shows the I/O terminals. Tightening torque is 0.4 N·m / 3.5 lbf·in.

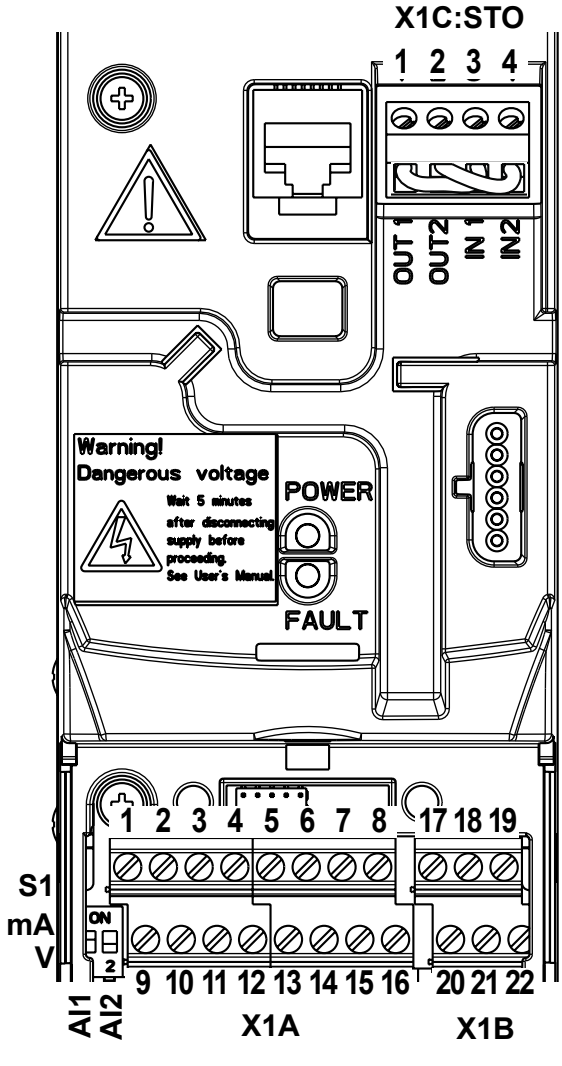

X1A:
1: SCR
2: AI1
3: GND
4: +10 V
5: AI2
6: GND
7: AO
8: GND
9: +24 V
10: GND
11: DCOM
12: DI1
13: DI2
14: DI3
15: DI4
16: DI5 digital or frequency input

X1B:
17: ROCOM
18: RONC
19: RONO
20: DOSRC
21: DOOUT
22: DOGND

X1C:STO
1: OUT1
2: OUT2
3: IN1
4: IN2

S1: Selects voltage or current as the signal types for analog inputs AI1 and AI2.

Voltage and current selection for analog inputs

Switch S1 selects voltage (0 [2]…10 V / -10…10 V) or current (0 [4]…20 mA / -20…20 mA) as the signal types for analog inputs AI1 and AI2. The factory settings are unipolar voltage for AI1 (0 [2]…10 V) and unipolar current for AI2 (0 [4]…20 mA), which correspond to the default usage in the application macros. The switch is located to the left of I/O terminal 9 (see the I/O terminal figure above).

S1 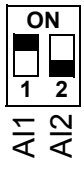

Top position (ON): I (0 [4]…20 mA, default for AI2; or -20…20 mA)
Bottom position (OFF): U (0 [2]…10 V, default for AI1; or -10…10 V)

Voltage and current connection for analog inputs

Bipolar voltage (-10…10 V) and current (-20…20 mA) are also possible. If a bipolar connection is used instead of a unipolar one, see section *Programmable analog inputs* on page *130* for how to set parameters accordingly.

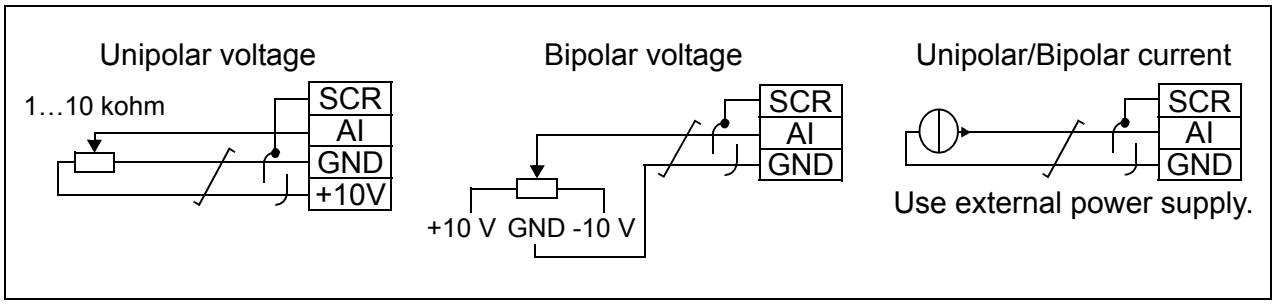

PNP and NPN configuration for digital inputs

You can wire the digital input terminals in either a PNP or NPN configuration.

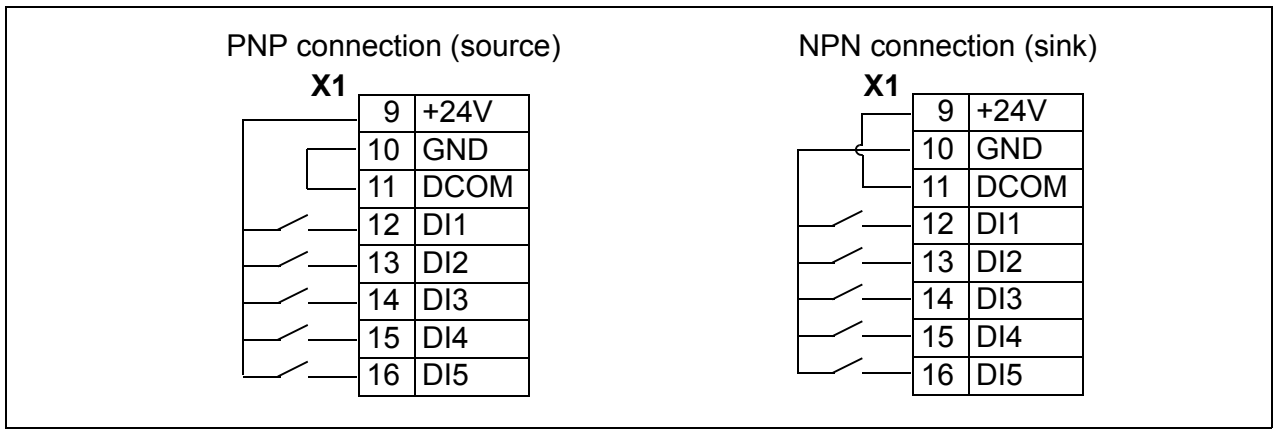

External power supply for digital inputs

For using an external +24 V supply for the digital inputs, see the figure below.

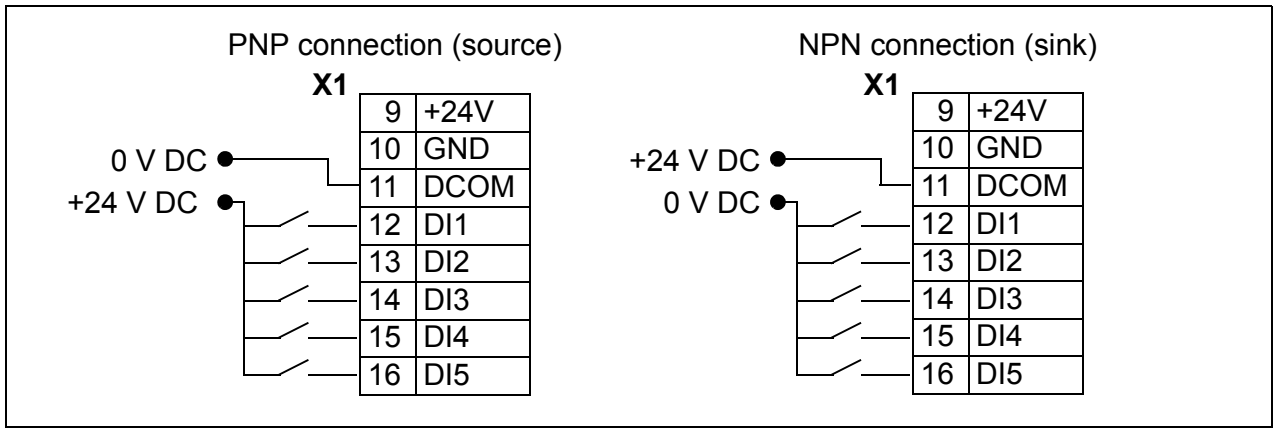

Frequency input

If DI5 is used as a frequency input, see section *Frequency input* on page *133* for how to set parameters accordingly.

Connection examples of two-wire and three-wire sensors

Hand/Auto, PID control, and Torque control macros (see section *Application macros*, pages *116*, *117* and *118*, respectively) use analog input 2 (AI2). The macro wiring diagrams on these pages use an externally powered sensor (connections not shown). The figures below give examples of connections using a two-wire or three-wire sensor/transmitter supplied by the drive auxiliary voltage output.

Note: Maximum capability of the auxiliary 24 V (200 mA) output must not be exceeded.

Two-wire sensor/transmitter

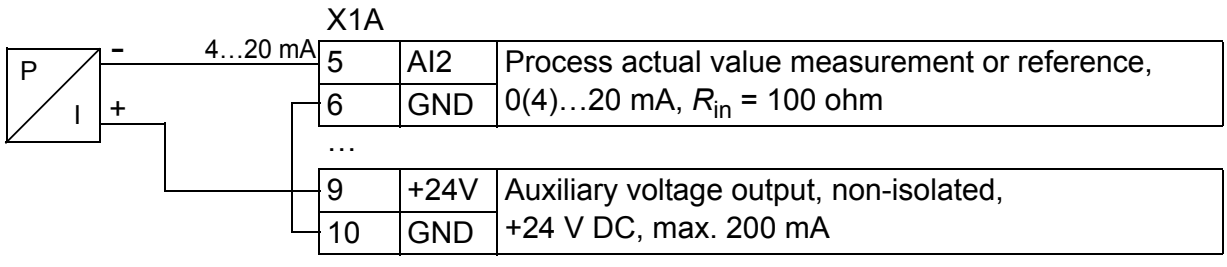

Note: The sensor is supplied through its current output and the drive feeds the supply voltage (+24 V). Thus the output signal must be 4…20 mA, not 0…20 mA.

Three-wire sensor/transmitter

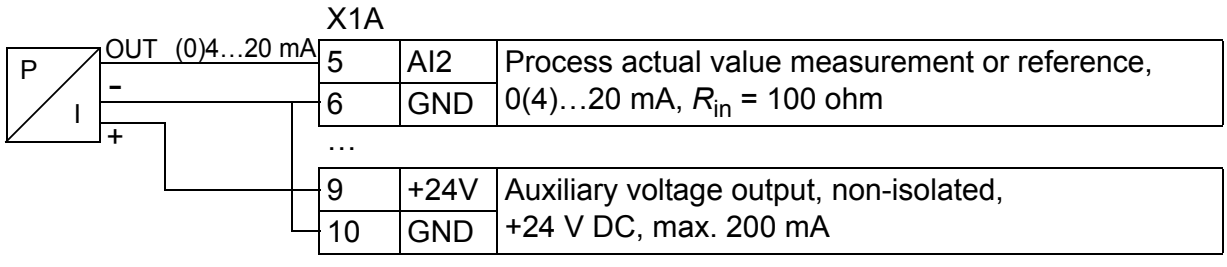

Default I/O connection diagram

The default connection of the control signals depends on the application macro in use, which is selected with parameter *9902 APPLIC MACRO*.

The default macro is the ABB standard macro. It provides a general purpose I/O configuration with three constant speeds. Parameter values are the default values given in section *Default values with different macros* on page *176*. For information on other macros, see chapter *Application macros* on page *109*.

The default I/O connections for the ABB standard macro are given in the figure below.

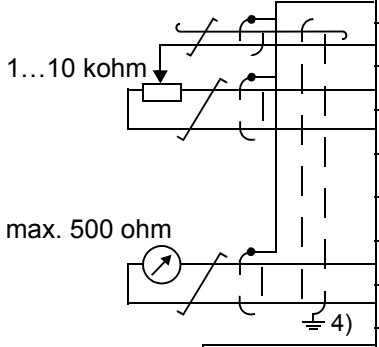

X1A

1	SCR	Signal cable shield (screen)
2	AI1	**Output frequency reference**: 0…10 V [1]
3	GND	Analog input circuit common
4	+10V	Reference voltage: +10 V DC, max. 10 mA
5	AI2	Not in use by default. 0…10 V
6	GND	Analog input circuit common
7	AO	**Output frequency value**: 0…20 mA
8	GND	Analog output circuit common
9	+24V	Auxiliary voltage output: +24 V DC, max. 200 mA
10	GND	Auxiliary voltage output common
11	DCOM	Digital input common
12	DI1	**Stop (0) / Start (1)**
13	DI2	**Forward (0) / Reverse (1)**
14	DI3	**Constant speed selection** [2]
15	DI4	**Constant speed selection** [2]
16	DI5	**Acceleration and deceleration selection** [3]

X1B

17	ROCOM	Relay output 1 **No fault [Fault (-1)]**
18	RONC	
19	RONO	
20	DOSRC	Digital output, max. 100 mA **No fault [Fault (-1)]**
21	DOOUT	
22	DOGND	

X1C:STO

1	OUT1	STO (Safe torque off) connection
2	OUT2	
3	IN1	
4	IN2	

[1] AI1 is used as a speed reference if vector mode is selected.

[2] See parameter group *12 CONSTANT SPEEDS*:

DI3	DI4	Operation (parameter)
0	0	Set speed through AI1
1	0	Speed 1 (*1202*)
0	1	Speed 2 (*1203*)
1	1	Speed 3 (*1204*)

[3] 0 = ramp times according to parameters *2202* and *2203*.
1 = ramp times according to parameters *2205* and *2206*.

[4] 360 degree grounding under a clamp.

Tightening torque = 0.4 N·m / 3.5 lbf·in.

Connection procedure

1. Remove the terminal cover by simultaneously pushing the recess and sliding the cover off the frame.
2. *Analog signals*: Strip the outer insulation of the analog signal cable 360 degrees and ground the bare shield under the clamp.
3. Connect the conductors to the appropriate terminals. Use a tightening torque of 0.4 N·m (3.5 lbf·in).
4. Twist the grounding conductors of each pair in the analog signal cable together and connect the bundle to the SCR terminal (terminal 1).
5. *Digital signals*: Strip the outer insulation of the digital signal cable 360 degrees and ground the bare shield under the clamp.
6. Connect the conductors of the cable to the appropriate terminals. Use a tightening torque of 0.4 N·m (3.5 lbf·in).
7. For double-shielded cables, twist also the grounding conductors of each pair in the cable together and connect the bundle to the SCR terminal (terminal 1).
8. Secure all cables outside the drive mechanically.
9. Unless you need to install the optional fieldbus module (see section *Attach the optional fieldbus module* on page *35*), slide the terminal cover back in place.
10. Connect STO conductors to the appropriate terminals. Use a tightening torque of 0.4 N·m (3.5 lbf·in).

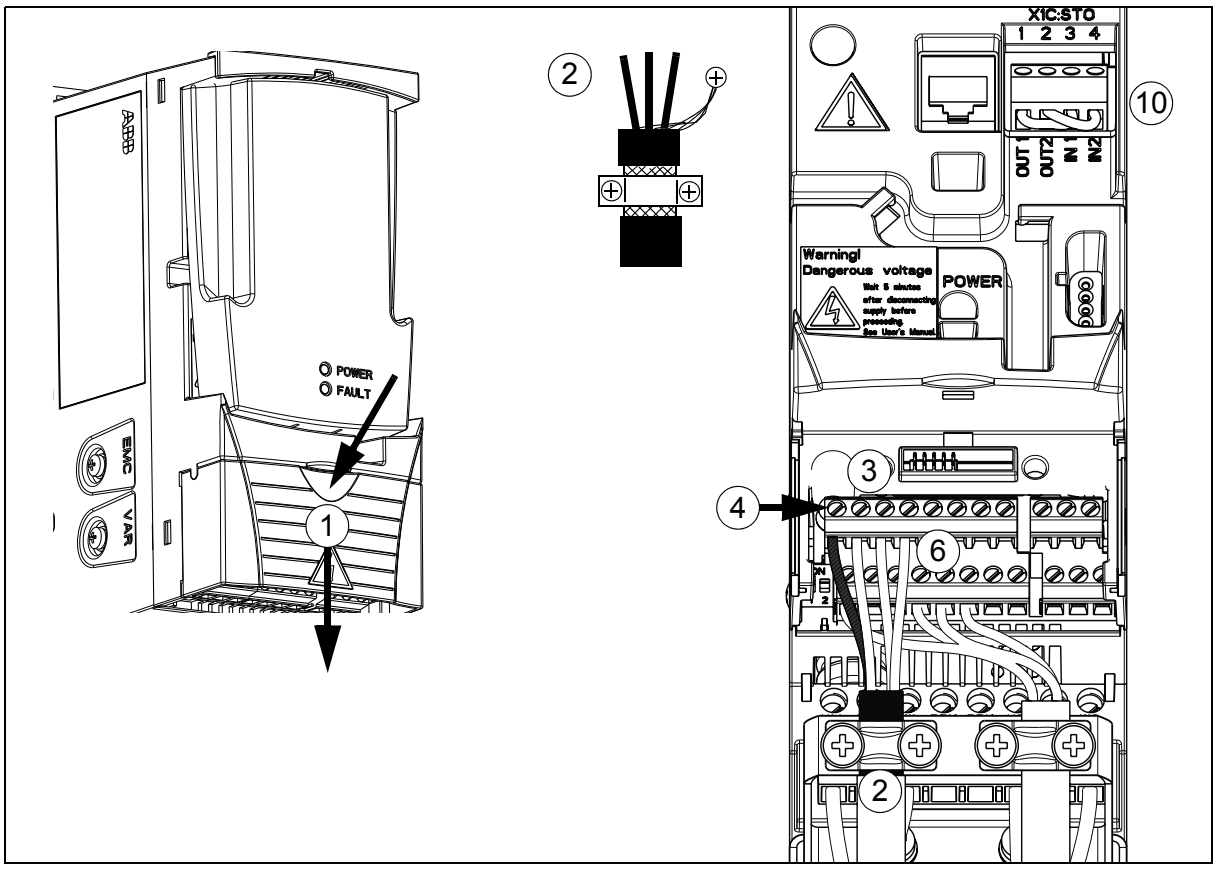

7

Installation checklist

Checking the installation

Check the mechanical and electrical installation of the drive before start-up. Go through the checklist below together with another person. Read chapter *Safety* on page *17* of this manual before you work on the drive.

Check
MECHANICAL INSTALLATION
☐ The ambient operating conditions are allowed. (See *Mechanical installation: Checking the installation site* on page *31* as well as *Technical data: Losses, cooling data and noise* on page *364* and *Ambient conditions* on page *371*.)
☐ The drive is fixed properly on an even vertical non-flammable wall. (See *Mechanical installation* on page *31*.)
☐ The cooling air will flow freely. (See *Mechanical installation*: *Free space around the drive* on page *32*.)
☐ The motor and the driven equipment are ready for start. (See *Planning the electrical installation*: *Checking the compatibility of the motor and drive* on page *38* as well as *Technical data: Motor connection data* on page *367*.)
ELECTRICAL INSTALLATION (See *Planning the electrical installation* on page *37* and *Electrical installation* on page *47*.)
☐ For ungrounded and corner-grounded systems: The internal EMC filter is disconnected (EMC screw removed).
☐ The capacitors are reformed if the drive has been stored over a year.
☐ The drive is grounded properly.
☐ The input power voltage matches the drive nominal input voltage.
☐ The input power connections at U1, V1 and W1 are OK and tightened with the correct torque.

	Check
☐	Appropriate input power fuses and disconnector are installed.
☐	The motor connections at U2, V2 and W2 are OK and tightened with the correct torque.
☐	The motor cable, input power cable and control cables are routed separately.
☐	The external control (I/O) connections are OK.
☐	Safe torque off (STO) connections, operation and reaction are OK.
☐	The input power voltage cannot be applied to the output of the drive (with a bypass connection).
☐	Terminal cover and, for NEMA 1, hood and connection box, are in place.

Start-up, control with I/O and ID run

What this chapter contains

The chapter tells how to:

- perform the start-up
- start, stop, change the direction of the motor rotation and adjust the speed of the motor through the I/O interface
- perform an Identification run for the drive.

Using the control panel to do these tasks is explained briefly in this chapter. For details on how to use the control panel, refer to chapter *Control panels* on page *73*.

How to start up the drive

WARNING! The start-up may only be carried out by a qualified electrician.

The safety instructions given in chapter *Safety* on page *17* must be followed during the start-up procedure.

The drive will start up automatically at power-up if the external run command is on and the drive is in the remote control mode.

Check that the starting of the motor does not cause any danger. **De-couple the driven machine** if:

- there is a risk of damage in case of incorrect direction of rotation, or
- an ID run needs to be performed during the drive start-up. ID run is essential only in applications that require the ultimate in motor control accuracy.

- Check the installation. See the checklist in chapter *Installation checklist* on page *57*.

How you start up the drive depends on the control panel you have, if any.

- **If you have no control panel**, follow the instructions given in section *How to start up the drive without a control panel* on page *60*.
- **If you have a basic control panel** (ACS-CP-C), follow the instructions given in section *How to perform a manual start-up* on page *61*.
- **If you have an assistant control panel** (ACS-CP-A, ACS-CP-D), you can either run the Start-up assistant (see section *How to perform a guided start-up* on page *66*) or perform a manual start-up (see section *How to perform a manual start-up* on page *61*).

  The Start-up assistant, which is included in the assistant control panel only, guides you through all essential settings to be done. In the manual start-up, the drive gives no guidance; you go through the very basic settings by following the instructions given in section *How to perform a manual start-up* on page *61*.

How to start up the drive without a control panel

POWER-UP	
☐	Apply input power and wait for a moment.
☐	Check that the red LED is not lit and the green LED is lit but not blinking.
The drive is now ready for use.	

How to perform a manual start-up

For the manual start-up, you can use the basic control panel or the assistant control panel. The instructions below are valid for both control panels, but the displays shown are the basic control panel displays, unless the instruction applies to the assistant control panel only.

Before you start, ensure that you have the motor nameplate data on hand.

POWER-UP

☐ Apply input power.

The basic control panel powers up into the Output mode.

The assistant control panel asks if you want to run the Start-up assistant. If you press EXIT, the Start-up assistant is not run, and you can continue with manual start-up in a similar manner as described below for the basic control panel.

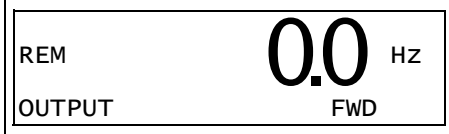

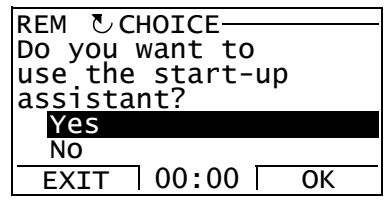

MANUAL ENTRY OF START-UP DATA (parameter group 99)

☐ If you have an assistant control panel, select the language (the basic control panel does not support languages). See parameter *9901* for the values of the available language alternatives.

For instructions on how to set parameters with the assistant control panel, see section *Assistant control panel* on page *87*.

☐ Select the motor type (*9903*).

- 1 (*AM*): Asynchronous motor
- 2 (*PMSM*): Permanent magnet motor.

Setting of parameter *9903* is shown below as an example of parameter setting with the basic control panel. You find more detailed instructions in section *Basic control panel* on page *75*.

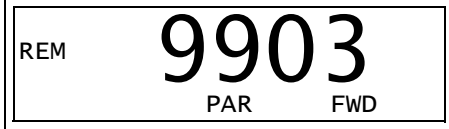

1. To go to the Main menu, press if the bottom line shows OUTPUT; otherwise press repeatedly until you see MENU at the bottom.

2. Press keys / until you see “PAr”, and press .

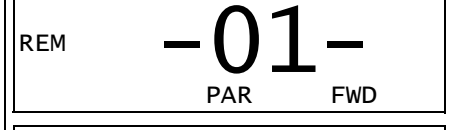

3. Find the appropriate parameter group with keys / and press .

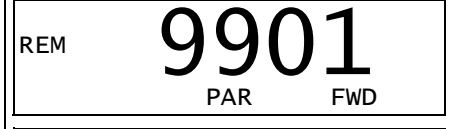

4. Find the appropriate parameter in the group with keys / .

5. Press and hold MENU for about two seconds until the parameter value is shown with SET under the value.

6. Change the value with keys ▲/▼. The value changes faster while you keep the key pressed down.

7. Save the parameter value by pressing MENU.

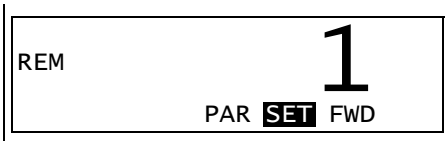

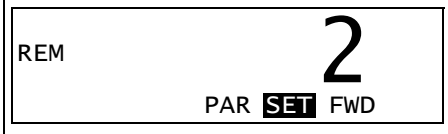

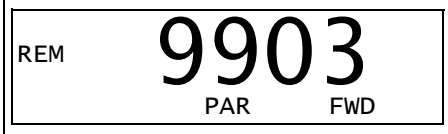

☐ Select the application macro (parameter *9902*) according to how the control cables are connected.

The default value 1 (*ABB STANDARD*) is suitable in most cases.

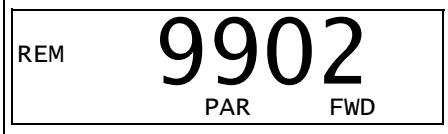

☐ Select the motor control mode (parameter *9904*).

1 (*VECTOR: SPEED*) is suitable in most cases.
2 (*VECTOR: TORQ*) is suitable for torque control applications.
3 (*SCALAR: FREQ*) is recommended

- for multimotor drives when the number of the motors connected to the drive is variable
- when the nominal current of the motor is less than 20% of the nominal current of the drive
- when the drive is used for test purposes with no motor connected.

3 (*SCALAR: FREQ*) is not recommended for permanent magnet motors.

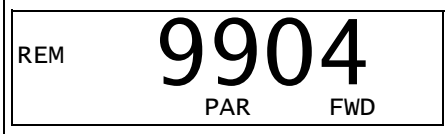

☐ Enter the motor data from the motor nameplate.

Asynchronous motor nameplate example:

ABB Motors CE

3 ~ motor	M2AA 200 MLA 4						
	IEC 200 M/L 55						
		No					
			Ins.cl. F			IP 55	
V	Hz	kW	r/min	A	cos φ	IA/IN	t E/s
690 Y	50	30	1475	32.5	0.83		
400 D	50	30	1475	56	0.83		
660 Y	50	30	1470	34	0.83		
380 D	50	30	1470	59	0.83		
415 D	50	30	1475	54	0.83		
440 D	60	35	1770	59	0.83		
Cat. no	3GAA 202 001 - ADA						
6312/C3			6210/C3			180 kg	
				IEC 34-1			

380 V supply voltage

Note: Set the motor data to exactly the same value as on the motor nameplate. For example, if the motor nominal speed is 1440 rpm on the nameplate, setting the value of parameter *9908 MOTOR NOM SPEED* to 1500 rpm results in the wrong operation of the drive.

Permanent magnet motor nameplate example:

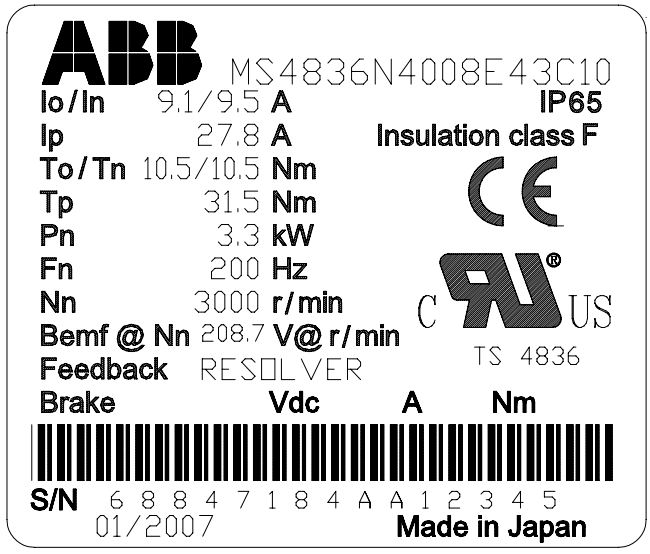

- motor nominal voltage (parameter *9905*).

  For permanent magnet motors, enter the back emf voltage at nominal speed here. Otherwise use nominal voltage and perform ID run.

  If the voltage is given as voltage per rpm, eg 60 V per 1000 rpm, the voltage for 3000 rpm nominal speed is 3 · 60 V = 180 V.

REM 9905 PAR FWD

- motor nominal current (parameter *9906*)

  Allowed range: 0.2…2.0 · I_{2N} A

REM 9906 PAR FWD

- motor nominal frequency (parameter *9907*)

REM 9907 PAR FWD

- motor nominal speed (parameter *9908*)

REM 9908 PAR FWD

- motor nominal power (parameter *9909*)

REM 9909 PAR FWD

☐ Select the motor identification method (parameter *9910*).

The default value 0 (*OFF/IDMAGN*) using the identification magnetization is suitable for most applications. It is applied in this basic start-up procedure. Note however that this requires that parameter *9904* is set to 1 (*VECTOR: SPEED*) or 2 (*VECTOR: TORQ*).

If your selection is 0 (*OFF/IDMAGN*), move to the next step.

Value 1 (*ON*) should be selected if:

- the operation point is near zero speed, and/or
- operation at torque range above the motor nominal torque over a wide speed range and without any measured speed feedback is required.

If you decide to perform the ID run (value 1 [*ON*]), continue by following the separate instructions given on page *69* in section *How to perform the ID run* and then return to step *DIRECTION OF THE MOTOR ROTATION* on page *64*.

IDENTIFICATION MAGNETIZATION WITH ID RUN SELECTION 0 (*OFF/IDMAGN*)

☐ Press key LOC REM to switch to local control (LOC shown on the left).

Press ◇ to start the drive. The motor model is now calculated by magnetizing the motor for 10 to 15 s at zero speed.

DIRECTION OF THE MOTOR ROTATION

☐ Check the direction of the motor rotation.

- If the drive is in remote control (REM shown on the left), switch to local control by pressing LOC REM.
- To go to the Main menu, press ⌐ if the bottom line shows OUTPUT; otherwise press ⌐ repeatedly until you see MENU at the bottom.
- Press keys ▲/▼ until you see “rEF” and press ⌐.
- Increase the frequency reference from zero to a small value with key ▲.
- Press ◇ to start the motor.
- Check that the actual direction of the motor is the same as indicated on the display (FWD means forward and REV reverse).
- Press ▽ to stop the motor.

To change the direction of the motor rotation:

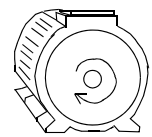
forward direction

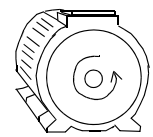
reverse direction

	• Invert the phases by changing the value of parameter *9914* to the opposite, ie from 0 (*NO*) to 1 (*YES*), or vice versa. • Verify your work by applying input power and repeating the check as described above.	LOC 9914 PAR FWD
SPEED LIMITS AND ACCELERATION/DECELERATION TIMES		
☐	Set the minimum speed (parameter *2001*).	LOC 2001 PAR FWD
☐	Set the maximum speed (parameter *2002*).	LOC 2002 PAR FWD
☐	Set the acceleration time 1 (parameter *2202*). **Note:** Set also acceleration time 2 (parameter *2205*) if two acceleration times will be used in the application.	LOC 2202 PAR FWD
☐	Set the deceleration time 1 (parameter *2203*). **Note:** Set also deceleration time 2 (parameter *2206*) if two deceleration times will be used in the application.	LOC 2203 PAR FWD
SAVING A USER MACRO AND FINAL CHECK		
☐	The start-up is now completed. However, it might be useful at this stage to set the parameters required by your application and save the settings as a user macro as instructed in section *User macros* on page *119*.	LOC 9902 PAR FWD
☐	Check that the drive state is OK. Basic control panel: Check that there are no faults or alarms shown on the display. If you want to check the LEDs on the front of the drive, switch first to remote control (otherwise a fault is generated) before removing the panel and verifying that the red LED is not lit and the green LED is lit but not blinking. Assistant control panel: Check that there are no faults or alarms shown on the display and that the panel LED is green and does not blink.	
The drive is now ready for use.		

How to perform a guided start-up

To be able to perform the guided start-up, you need the assistant control panel. Guided start-up is applicable to AC induction motors.

Before you start, ensure that you have the motor nameplate data on hand.

POWER-UP		
☐	Apply input power. The control panel first asks if you want to use the Start-up assistant. • Press OK (when **Yes** is highlighted) to run the Start-up assistant. • Press EXIT if you do not want to run the Start-up assistant. • Press key ▼ to highlight **No** and then press OK if you want to make the panel ask (or not ask) the question about running the Start-up assistant again the next time you switch on the power to the drive.	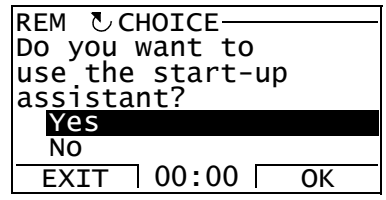 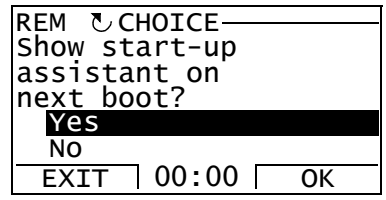
SELECTING THE LANGUAGE		
☐	If you decided to run the Start-up assistant, the display then asks you to select the language. Scroll to the desired language with keys ▲/▼ and press SAVE to accept. If you press EXIT, the Start-up assistant is stopped.	
STARTING THE GUIDED SET-UP		
☐	The Start-up assistant now guides you through the set-up tasks, starting with the motor set-up. Set the motor data to exactly the same value as on the motor nameplate. Scroll to the desired parameter value with keys ▲/▼ and press SAVE to accept and continue with the Start-up assistant. **Note:** At any time, if you press EXIT, the Start-up assistant is stopped and the display goes to the Output mode.	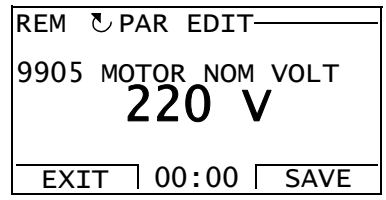
☐	The basic start-up is now completed. However, it might be useful at this stage to set the parameters required by your application and continue with the application set-up as suggested by the Start-up assistant.	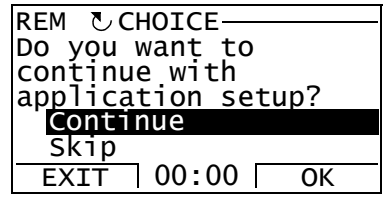

☐ Select the application macro according to which the control cables are connected.

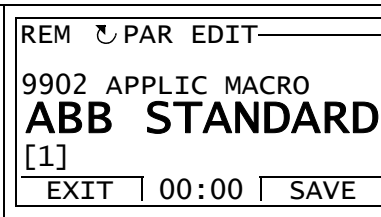

Continue with the application set-up. After completing a set-up task, the Start-up assistant suggests the next one.

- Press OK (when Continue is highlighted) to continue with the suggested task.
- Press key ▼ to highlight Skip and then press OK to move to the following task without doing the suggested task.
- Press EXIT to stop the Start-up assistant.

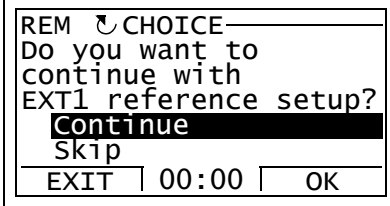

DIRECTION OF THE MOTOR ROTATION

☐ Press key LOC REM to switch to local control (LOC shown on the left).

- If the drive is in remote control (REM shown on the status line), switch to local control by pressing LOC REM.
- If you are not in the Output mode, press EXIT repeatedly until you get there.

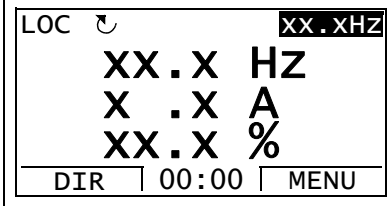

- Increase the frequency reference from zero to a small value with key ▲.
- Press ▶ to start the motor.
- Check that the actual direction of the motor is the same as indicated on the display (↻ means forward and ↺ reverse).
- Press ■ to stop the motor.

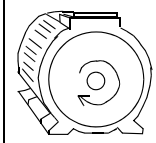
forward direction

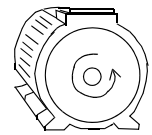
reverse direction

To change the direction of the motor rotation:

- Invert the phases by changing the value of parameter *9914* to the opposite, ie from 0 (*NO*) to 1 (*YES*), or vice versa.
- Verify your work by applying input power and repeating the check as described above.

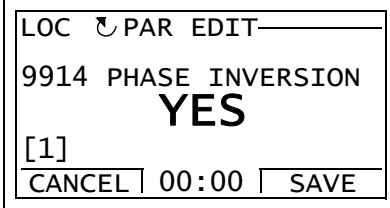

FINAL CHECK

☐ After the whole set-up is completed, check that there are no faults or alarms shown on the display and the panel LED is green and does not blink.

The drive is now ready for use.

How to control the drive through the I/O interface

The table below instructs how to operate the drive through the digital and analog inputs when:

- the motor start-up is performed, and
- the default (standard) parameter settings are valid.

Displays of the basic control panel are shown as an example.

PRELIMINARY SETTINGS	
If you need to change the direction of rotation, check that parameter *1003 DIRECTION* is set to 3 (*REQUEST*).	
Ensure that the control connections are wired according to the connection diagram given for the ABB standard macro.	See section *Default I/O connection diagram* on page *54*.
Ensure that the drive is in remote control. Press key LOC REM to switch between remote and local control.	In remote control, the panel display shows text REM.
STARTING AND CONTROLLING THE SPEED OF THE MOTOR	
Start by switching digital input DI1 on. Basic control panel: Text FWD starts flashing fast and stops after the setpoint is reached Assistant control panel: The arrow starts rotating. It is dotted until the setpoint is reached.	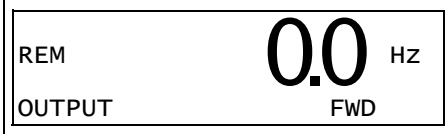
Regulate the drive output frequency (motor speed) by adjusting the voltage of analog input AI1.	
CHANGING THE DIRECTION OF THE MOTOR ROTATION	
Reverse direction: Switch digital input DI2 on.	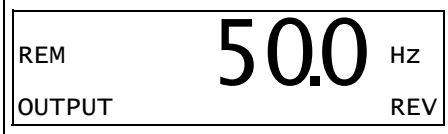
Forward direction: Switch digital input DI2 off.	
STOPPING THE MOTOR	
Switch digital input DI1 off. The motor stops. Basic control panel: Text FWD starts flashing slowly. Assistant control panel: The arrow stops rotating.	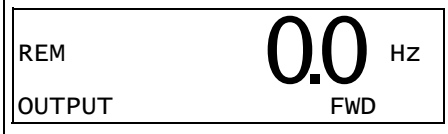

How to perform the ID run

The drive estimates motor characteristics automatically when the drive is started for the first time and after any motor parameter (group *99 START-UP DATA*) is changed. This is valid when parameter *9910 ID RUN* has value 0 (*OFF/IDMAGN*).

In most applications there is no need to perform a separate ID run. The ID run should be selected if:

- vector control mode is used (parameter *9904* = 1 [*VECTOR: SPEED*] or 2 [*VECTOR: TORQ*]), and
- operation point is near zero speed and/or
- operation at torque range above the motor nominal torque, over a wide speed range, and without any measured speed feedback (ie without a pulse encoder) is needed or
- permanent magnet motor is used and the back emf voltage is unknown.

Note: If motor parameters (group *99 START-UP DATA*) are changed after the ID run, it must be repeated.

ID run procedure

The general parameter setting procedure is not repeated here. For basic control panel, see page *75* and for assistant control panel, see page *87* in chapter *Control panels*. The ID run cannot be performed without a control panel.

PRE-CHECK	
WARNING! The motor will run at up to approximately 50…80% of the nominal speed during the ID run. The motor will rotate in the forward direction. **Ensure that it is safe to run the motor before performing the ID run!**	
☐	De-couple the motor from the driven equipment
☐	If parameter values (group *01 OPERATING DATA* to group *98 OPTIONS*) are changed before the ID run, check that the new settings meet the following conditions:
☐	*2001 MINIMUM SPEED* < 0 rpm
☐	*2002 MAXIMUM SPEED* > 80% of the motor rated speed
☐	*2003 MAX CURRENT* > I_{2N}
☐	*2017 MAX TORQUE 1* > 50% or *2018 MAX TORQUE 2* > 50%, depending on which limit is in use according to parameter *2014 MAX TORQUE SEL*.
☐	Check that the Run enable signal is on (parameter *1601*).
☐	Ensure that the panel is in local control (LOC shown at the top). Press key LOC REM to switch between local and remote control.

ID RUN WITH THE BASIC CONTROL PANEL

☐ Change parameter *9910 ID RUN* to 1 (*ON*). Save the new setting by pressing .

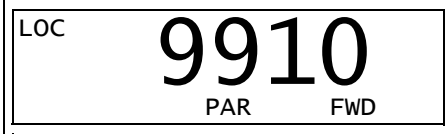

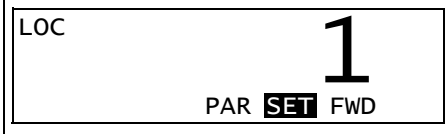

☐ If you want to monitor actual values during the ID run, go to the Output mode by pressing repeatedly until you get there.

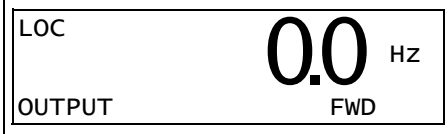

☐ Press to start the ID run. The panel keeps switching between the display that was shown when you started the run and the alarm display presented on the right.

In general, it is recommended not to press any control panel keys during the ID run. However, you can stop the ID run at any time by pressing .

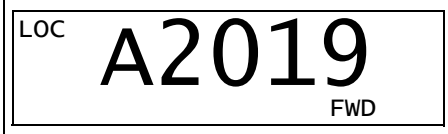

☐ After the ID run is completed, the alarm display is not shown any more.

If the ID run fails, the fault display presented on the right is shown.

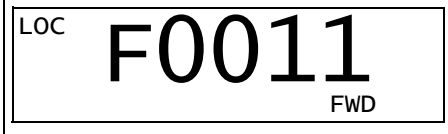

ID RUN WITH THE ASSISTANT CONTROL PANEL

☐ Change parameter *9910 ID RUN* to 1 (*ON*). Save the new setting by pressing SAVE.

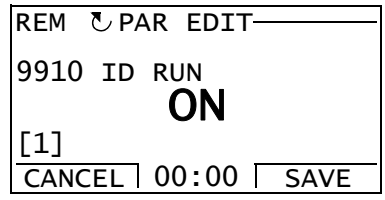

☐ If you want to monitor actual values during the ID run, go to the Output mode by pressing EXIT repeatedly until you get there.

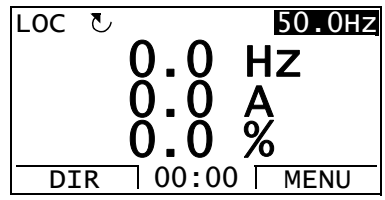

☐ Press to start the ID run. The panel keeps switching between the display that was shown when you started the run Run and the alarm display presented on the right.

In general, it is recommended not to press any control panel keys during the ID run. However, you can stop the ID run at any time by pressing .

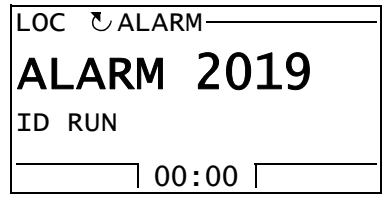

☐	After the ID run is completed, the alarm display is not shown any more. If the ID run fails, the fault display presented on the right is shown.	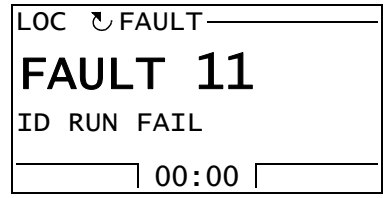

Control panels

What this chapter contains

The chapter describes the control panel keys, LED indicators and display fields. It also instructs in using the panel in control, monitoring and changing the settings.

About control panels

Use a control panel to control the ACS355, read status data, and adjust parameters. The drive works with either of two different control panel types:

- Basic control panel – This panel (described in section *Basic control panel* on page *75*) provides basic tools for manual entry of parameter values.
- Assistant control panel – This panel (described in section *Assistant control panel* on page *87*) includes pre-programmed assistants to automate the most common parameter setups. The panel provides language support. It is available with different language sets.

Applicability

The manual is applicable to panels with the panel revisions and the panel firmware versions given in the table below.

Panel type	Type code	Panel revision	Panel firmware version
Basic control panel	ACS-CP-C	M or later	1.13 or later
Assistant control panel	ACS-CP-A	F or later	2.04 or later
Assistant control panel (Asia)	ACS-CP-D	Q or later	2.04 or later

To find out the panel revision, see the label on the back of the panel. An example label and explanation of the label contents are shown below.

1	Panel type code
2	Serial number of format MYYWWRXXXX, where M: Manufacturer YY: 09, 10, 11, …, for 2009, 2010, 2011, … WW: 01, 02, 03, … for week 1, week 2, week 3, … R: A, B, C, … for panel revision XXXX: Integer starting every week from 0001
3	RoHS mark (the label of your drive shows the valid markings)

To find out the panel firmware version of your assistant control panel, see page *91*. For the basic control panel, see page *78*.

See parameter *9901 LANGUAGE* to find out the languages supported by the different assistant control panels.

Basic control panel

Features

The basic control panel features:

- numeric control panel with an LCD display
- copy function – parameters can be copied to the control panel memory for later transfer to other drives or for backup of a particular system.

Overview

The following table summarizes the key functions and displays on the basic control panel.

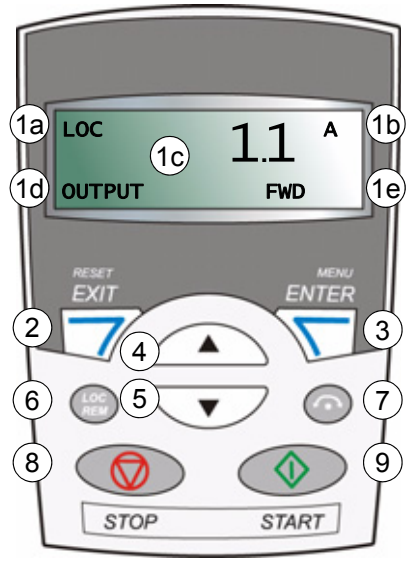

No.	Use
1	LCD display – Divided into five areas: a. Upper left – Control location: LOC: drive control is local, that is, from the control panel REM: drive control is remote, such as the drive I/O or fieldbus. b. Upper right – Unit of the displayed value. c. Center – Variable; in general, shows parameter and signal values, menus or lists. Shows also fault and alarm codes. d. Lower left and center – Panel operation state: OUTPUT: Output mode PAR: Parameter mode MENU: Main menu. FAULT: Fault mode. e. Lower right – Indicators: FWD (forward) / REV (reverse): direction of the motor rotation Flashing slowly: stopped Flashing rapidly: running, not at setpoint Steady: running, at setpoint SET: Displayed value can be modified (in the Parameter and Reference modes).
2	RESET/EXIT – Exits to the next higher menu level without saving changed values. Resets faults in the Output and Fault modes.
3	MENU/ENTER – Enters deeper into menu level. In the Parameter mode, saves the displayed value as the new setting.
4	Up – • Scrolls up through a menu or list. • Increases a value if a parameter is selected. • Increases the reference value in the Reference mode. • Holding the key down changes the value faster.
5	Down – • Scrolls down through a menu or list. • Decreases a value if a parameter is selected. • Decreases the reference value in the Reference mode. • Holding the key down changes the value faster.
6	LOC/REM – Changes between local and remote control of the drive.
7	DIR – Changes the direction of the motor rotation.
8	STOP – Stops the drive in local control.
9	START – Starts the drive in local control.

efesotomasyon.com

Operation

You operate the control panel with the help of menus and keys. You select an option, eg operation mode or parameter, by scrolling the ▲ and ▼ arrow keys until the option is visible in the display and then pressing the key.

With the key, you return to the previous operation level without saving the made changes.

The basic control panel has five panel modes: *Output mode*, *Reference mode*, *Parameter mode*, *Copy mode* and Fault mode. The operation in the first four modes is described in this chapter. When a fault or alarm occurs, the panel goes automatically to the Fault mode showing the fault or alarm code. You can reset the fault or alarm in the Output or Fault mode (see chapter *Fault tracing* on page *335*).

After the power is switched on, the panel is in the Output mode, where you can start, stop, change the direction, switch between local and remote control and monitor up to three actual values (one at a time). To do other tasks, go first to the Main menu and select the appropriate mode.

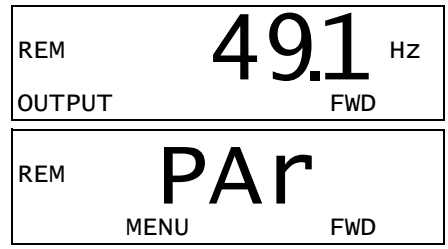

How to do common tasks

The table below lists common tasks, the mode in which you can perform them and the page number where the steps to do the task are described in detail.

Task	Mode	Page
How to find out the panel firmware version	At power up	*78*
How to switch between local and remote control	Any	*78*
How to start and stop the drive	Any	*78*
How to change the direction of the motor rotation	Any	*79*
How to browse the monitored signals	Output	*80*
How to set the speed, frequency or torque reference	Reference	*81*
How to change the value of a parameter	Parameter	*82*
How to select the monitored signals	Parameter	*83*
How to reset faults and alarms	Output, Fault	*335*
How to copy parameters from the drive to the control panel	Copy	*86*
How to restore parameters from the control panel to the drive	Copy	*86*

How to find out the panel firmware version

Step	Action	Display
1.	If the power is switched on, switch it off.	
2.	Keep key pressed down while you switch on the power and read the panel firmware version shown on the display. When you release the key, the panel goes to the Output mode.	X.XX

How to start, stop and switch between local and remote control

You can start, stop and switch between local and remote control in any mode. To be able to start or stop the drive, the drive must be in local control.

Step	Action	Display
1.	• To switch between remote control (REM shown on the left) and local control (LOC shown on the left), press LOC/REM. **Note:** Switching to local control can be disabled with parameter *1606 LOCAL LOCK*. After pressing the key, the display briefly shows message “LoC” or “rE”, as appropriate, before returning to the previous display. The very first time the drive is powered up, it is in remote control (REM) and controlled through the drive I/O terminals. To switch to local control (LOC) and control the drive using the control panel, press LOC/REM. The result depends on how long you press the key: • If you release the key immediately (the display flashes “LoC”), the drive stops. Set the local control reference as instructed on page *81*. • If you press the key for about two seconds (release when the display changes from “LoC” to “LoC r”), the drive continues as before. The drive copies the current remote values for the run/stop status and the reference, and uses them as the initial local control settings.	LOC 49.1 Hz OUTPUT FWD LOC LoC FWD
	• To stop the drive in local control, press .	Text FWD or REV on the bottom line starts flashing slowly.
	• To start the drive in local control, press .	Text FWD or REV on the bottom line starts flashing rapidly. It stops flashing when the drive reaches the setpoint.

How to change the direction of the motor rotation

You can change the direction of the motor rotation in any mode.

Step	Action	Display
1.	If the drive is in remote control (REM shown on the left), switch to local control by pressing LOC/REM. The display briefly shows message “LoC” before returning to the previous display.	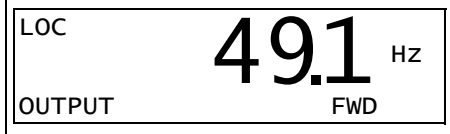
2.	To change the direction from forward (FWD shown at the bottom) to reverse (REV shown at the bottom), or vice versa, press . **Note**: Parameter *1003 DIRECTION* must be set to 3 (*REQUEST*).	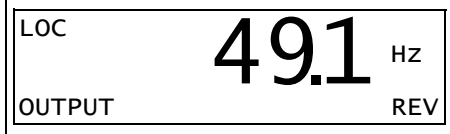

Output mode

In the Output mode, you can:

- monitor actual values of up to three group *01 OPERATING DATA* signals, one signal at a time
- start, stop, change the direction and switch between local and remote control.

You get to the Output mode by pressing ☰ until the display shows text OUTPUT at the bottom.

The display shows the value of one group *01 OPERATING DATA* signal. The unit is shown on the right. Page *83* tells how to select up to three signals to be monitored in the Output mode. The table below shows how to view them one at a time.

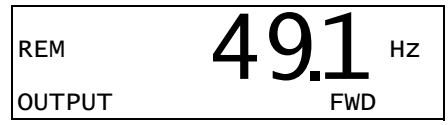

How to browse the monitored signals

Step	Action	Display
1.	If more than one signals have been selected to be monitored (see page *83*), you can browse them in the Output mode. To browse the signals forward, press key ▲ repeatedly. To browse them backward, press key ▼ repeatedly.	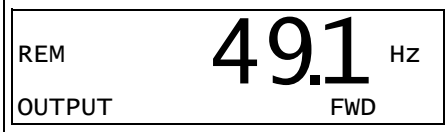 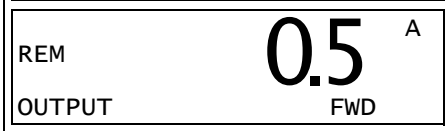 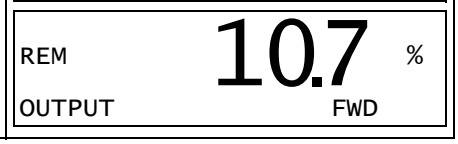

Reference mode

In the Reference mode, you can:

- set the speed, frequency or torque reference
- start, stop, change the direction and switch between local and remote control.

How to set the speed, frequency or torque reference

Step	Action	Display
1.	Go to the Main menu by pressing if you are in the Output mode, otherwise by pressing repeatedly until you see MENU at the bottom.	REM PAr MENU FWD
2.	If the drive is in remote control (REM shown on the left), switch to local control by pressing LOC/REM. The display briefly shows “LoC” before switching to local control. **Note**: With group *11 REFERENCE SELECT*, you can allow the reference modification in remote control (REM).	LOC PAr MENU FWD
3.	If the panel is not in the Reference mode (“rEF” not visible), press key ▲ or ▼ until you see “rEF” and then press . Now the display shows the current reference value with SET under the value.	LOC rEF MENU FWD LOC 49.1 Hz SET FWD
4.	• To increase the reference value, press ▲. • To decrease the reference value, press ▼. The value changes immediately when you press the key. It is stored in the drive permanent memory and restored automatically after power switch-off.	LOC 50.0 Hz SET FWD

Parameter mode

In the Parameter mode, you can:

- view and change parameter values
- select and modify the signals shown in the Output mode
- start, stop, change the direction and switch between local and remote control.

How to select a parameter and change its value

Step	Action	Display
1.	Go to the Main menu by pressing if you are in the Output mode, otherwise by pressing repeatedly until you see MENU at the bottom.	LOC rEF MENU FWD
2.	If the panel is not in the Parameter mode (“PAr” not visible), press key or until you see “PAr” and then press . The display shows the number of one of the parameter groups.	LOC PAr MENU FWD LOC -01- PAR FWD
3.	Use keys and to find the desired parameter group.	LOC -11- PAR FWD
4.	Press . The display shows one of the parameters in the selected group.	LOC 1101 PAR FWD
5.	Use keys and to find the desired parameter.	LOC 1103 PAR FWD
6.	Press and hold for about two seconds until the display shows the value of the parameter with SET underneath indicating that changing of the value is now possible. **Note:** When SET is visible, pressing keys and simultaneously changes the displayed value to the default value of the parameter.	LOC 1 PAR SET FWD
7.	Use keys and to select the parameter value. When you have changed the parameter value, SET starts flashing. • To save the displayed parameter value, press . • To cancel the new value and keep the original, press .	LOC 2 PAR SET FWD LOC 1103 PAR FWD

How to select the monitored signals

Step	Action	Display
1.	You can select which signals are monitored in the Output mode and how they are displayed with group *34 PANEL DISPLAY* parameters. See page *82* for detailed instructions on changing parameter values. By default, the display shows three signals. Signal 1: *0102 SPEED* for macros 3-wire, Alternate, Motor potentiometer, Hand/Auto and PID control; *0103 OUTPUT FREQ* for macros ABB standard and Torque control Signal 2: *0104 CURRENT* Signal 3: *0105 TORQUE*. To change the default signals, select up to three signals from group *01 OPERATING DATA* to be shown. Signal 1: Change the value of parameter *3401 SIGNAL1 PARAM* to the index of the signal parameter in group *01 OPERATING DATA* (= number of the parameter without the leading zero), eg 105 means parameter *0105 TORQUE*. Value 100 means that no signal is displayed. Repeat for signals 2 (*3408 SIGNAL2 PARAM*) and 3 (*3415 SIGNAL3 PARAM*). For example, if *3401* = 0 and *3415* = 0, browsing is disabled and only the signal specified by *3408* appears in the display. If all three parameters are set to 0, ie no signals are selected for monitoring, the panel displays text “n.A”.	LOC 103 PAR SET FWD LOC 104 PAR SET FWD LOC 105 PAR SET FWD
2.	Specify the decimal point location, or use the decimal point location and unit of the source signal (setting 9 [*DIRECT*]). Bar graphs are not available for basic control panel. For details, see parameter *3404*. Signal 1: parameter *3404 OUTPUT1 DSP FORM* Signal 2: parameter *3411 OUTPUT2 DSP FORM* Signal 3: parameter *3418 OUTPUT3 DSP FORM*.	LOC 9 PAR SET FWD
3.	Select the units to be displayed for the signals. This has no effect if parameter *3404*/*3411*/*3418* is set to 9 (*DIRECT*). For details, see parameter *3405*. Signal 1: parameter *3405 OUTPUT1 UNIT* Signal 2: parameter *3412 OUTPUT2 UNIT* Signal 3: parameter *3419 OUTPUT3 UNIT*.	LOC 3 PAR SET FWD

Step	Action	Display
4.	Select the scalings for the signals by specifying the minimum and maximum display values. This has no effect if parameter *3404*/*3411*/*3418* is set to 9 (*DIRECT*). For details, see parameters *3406* and *3407*. Signal 1: parameters *3406 OUTPUT1 MIN* and *3407 OUTPUT1 MAX* Signal 2: parameters *3413 OUTPUT2 MIN* and *3414 OUTPUT2 MAX* Signal 3: parameters *3420 OUTPUT3 MIN* and *3421 OUTPUT3 MAX*.	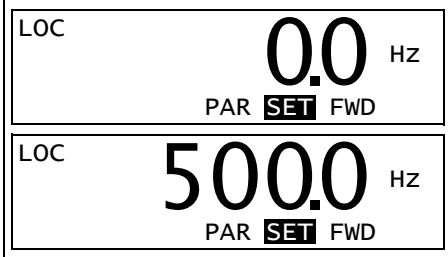

Copy mode

The basic control panel can store a full set of drive parameters and up to three user sets of drive parameters to the control panel. Uploading and downloading can be performed in local control. The control panel memory is non-volatile.

In the Copy mode, you can do the following:

- Copy all parameters from the drive to the control panel (uL – Upload). This includes all defined user sets of parameters and internal (not adjustable by the user) parameters such as those created by the ID run.
- Restore the full parameter set from the control panel to the drive (dL A – Download all). This writes all parameters, including the internal non-user-adjustable motor parameters, to the drive. It does not include the user sets of parameters.

  Note: Only use this function to restore a drive, or to transfer parameters to systems that are identical to the original system.
- Copy a partial parameter set from the control panel to a drive (dL P – Download partial). The partial set does not include user sets, internal motor parameters, parameters *9905*…*9909*, *1605*, *1607*, *5201*, nor any group *51 EXT COMM MODULE* and *53 EFB PROTOCOL* parameters.

  The source and target drives and their motor sizes do not need to be the same.
- Copy user set 1 parameters from the control panel to the drive (dL u1 – Download user set 1). A user set includes group *99 START-UP DATA* parameters and the internal motor parameters.

  The function is only shown on the menu when user set 1 has been first saved using parameter *9902 APPLIC MACRO* (see section *User macros* on page *119*) and then uploaded to panel.
- Copy user set 2 parameters from the control panel to the drive (dL u2 – Download user set 2). As dL u1 – Download user set 1 above.
- Copy user set 3 parameters from the control panel to the drive (dL u3 – Download user set 2). As dL u1 – Download user set 1 above.
- Start, stop, change the direction and switch between local and remote control.

How to upload and download parameters

For the upload and download functions available, see above. Note that the drive has to be in local control for uploading and downloading.

Step	Action	Display
1.	Go to the Main menu by pressing if you are in the Output mode, otherwise by pressing repeatedly until you see MENU at the bottom. – If REM is shown on the left, press first to switch to local control.	LOC PAr MENU FWD
2.	If the panel is not in the Copy mode (“CoPY” not visible), press key or until you see “CoPY”. Press .	LOC CoPY MENU FWD LOC uL MENU FWD
3.	To upload all parameters (including user sets) from the drive to the control panel, step to “uL” with keys and . Press . During the transfer, the display shows the transfer status as a percentage of completion. To perform downloads, step to the appropriate operation (here “dL A”, Download all, is used as an example) with keys and . Press . During the transfer, the display shows the transfer status as a percentage of completion.	LOC uL MENU FWD LOC uL 50 % FWD LOC dL A MENU FWD LOC dL 50 % FWD

Basic control panel alarm codes

In addition to the faults and alarms generated by the drive (see chapter *Fault tracing* on page *335*), the basic control panel indicates control panel alarms with a code of form A5xxx. See section *Alarms generated by the basic control panel* on page *341* for a list of the alarm codes and descriptions.

Assistant control panel

Features

The assistant control panel features:

- alphanumeric control panel with an LCD display
- language selection for the display
- Start-up assistant to ease drive commissioning
- copy function – parameters can be copied to the control panel memory for later transfer to other drives or for backup of a particular system.
- context sensitive help
- real time clock.

Overview

The following table summarizes the key functions and displays on the assistant control panel

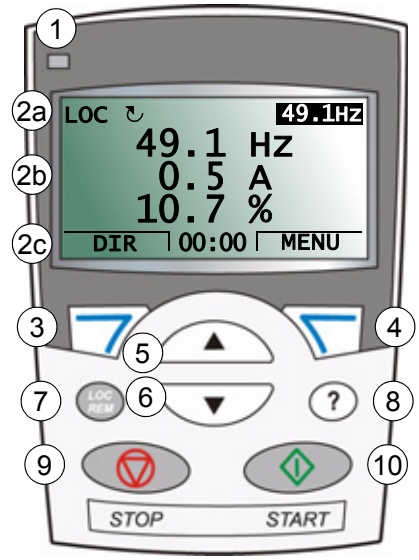

No.	Use
1	Status LED – Green for normal operation. If LED is flashing, or red, see section *LEDs* on page *356*.
2	LCD display – Divided into three main areas: f. Status line – variable, depending on the mode of operation, see section *Status line* on page *89*. g. Center – variable; in general, shows signal and parameter values, menus or lists. Shows also faults and alarms. h. Bottom line – shows current functions of the two soft keys and, if enabled, the clock display.
3	Soft key 1 – Function depends on the context. The text in the lower left corner of the LCD display indicates the function.
4	Soft key 2 – Function depends on the context. The text in the lower right corner of the LCD display indicates the function.
5	Up – • Scrolls up through a menu or list displayed in the center of the LCD display. • Increments a value if a parameter is selected. • Increments the reference value if the upper right corner is highlighted. Holding the key down changes the value faster.
6	Down – • Scrolls down through a menu or list displayed in the center of the LCD display. • Decrements a value if a parameter is selected. • Decrements the reference value if the upper right corner is highlighted. Holding the key down changes the value faster.
7	LOC/REM – Changes between local and remote control of the drive.
8	Help – Displays context sensitive information when the key is pressed. The information displayed describes the item currently highlighted in the center of the display.
9	STOP – Stops the drive in local control.

Status line

The top line of the LCD display shows the basic status information of the drive.

No.	Field	Alternatives	Significance
1	Control location	LOC	Drive control is local, that is, from the control panel.
		REM	Drive control is remote, such as the drive I/O or fieldbus.
2	State	↻	Forward shaft direction
		↺	Reverse shaft direction
		Rotating arrow	Drive is running at setpoint.
		Dotted rotating arrow	Drive is running but not at setpoint.
		Stationary arrow	Drive is stopped.
		Dotted stationary arrow	Start command is present, but the motor is not running, eg because start enable is missing.
3	Panel operation mode		• Name of the current mode • Name of the list or menu shown • Name of the operation state, eg PAR EDIT.
4	Reference value or number of the selected item		• Reference value in the Output mode • Number of the highlighted item, eg mode, parameter group or fault.

Operation

You operate the control panel with menus and keys. The keys include two context-sensitive soft keys, whose current function is indicated by the text shown in the display above each key.

You select an option, eg operation mode or parameter, by scrolling the ▲ and ▼ arrow keys until the option is highlighted (in reverse video) and then pressing the relevant soft key. With the right soft key you usually enter a mode, accept an option or save the changes. The left soft key is used to cancel the made changes and return to the previous operation level.

The assistant control panel has nine panel modes: *Output mode*, *Parameter mode*, *Assistants mode*, *Changed parameters mode*, *Fault logger mode*, *Time and date mode*, *Parameter backup mode*, *I/O settings mode* and Fault mode. The operation in the first eight modes is described in this chapter. When a fault or alarm occurs, the panel goes automatically to the Fault mode showing the fault or alarm. You can reset it in the Output or Fault mode (see chapter *Fault tracing* on page *335*).

Initially, the panel is in the Output mode, where you can start, stop, change the direction, switch between local and remote control, modify the reference value and monitor up to three actual values.

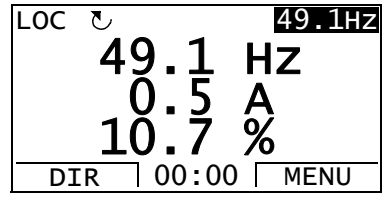

To do other tasks, go first to the Main menu and select the appropriate mode on the menu. The status line (see section *Status line* on page *89*) shows the name of the current menu, mode, item or state.

How to do common tasks

The table below lists common tasks, the mode in which you can perform them and the page number where the steps to do the task are described in detail.

Task	Mode	Page
How to get help	Any	*91*
How to find out the panel version	At power up	*91*
How to adjust the display contrast	Output	*94*
How to switch between local and remote control	Any	*92*
How to start and stop the drive	Any	*93*
How to change the direction of the motor rotation	Output	*93*
How to set the speed, frequency or torque reference	Output	*94*
How to change the value of a parameter	Parameters	*95*
How to select the monitored signals	Parameters	*96*
How to do guided tasks (specification of related parameter sets) with assistants	Assistants	*98*
How to view and edit changed parameters	Changed parameters	*100*
How to view faults	Fault logger	*101*
How to reset faults and alarms	Output, Fault	*335*
How to show/hide the clock, change date and time formats, set the clock and enable/disable automatic clock transitions according to the daylight saving changes	Time and date	*102*
How to copy parameters from the drive to the control panel	Parameter backup	*105*
How to restore parameters from the control panel to the drive	Parameter backup	*105*
How to view backup information	Parameter backup	*106*
How to edit and change parameter settings related to I/O terminals	I/O settings	*107*

How to get help

Step	Action	Display
1.	Press (?) to read the context-sensitive help text for the item that is highlighted. If help text exists for the item, it is shown on the display.	LOC ↻PAR GROUPS——10 01 OPERATING DATA 03 FB ACTUAL SIGNALS 04 FAULT HISTORY 10 START/STOP/DIR 11 REFERENCE SELECT EXIT | 00:00 | SEL LOC ↻HELP—————— This group defines external sources (EXT1 and EXT2) for commands that enable start, stop and EXIT | 00:00 |
2.	If the whole text is not visible, scroll the lines with keys ▲ and ▼.	LOC ↻HELP—————— external sources (EXT1 and EXT2) for commands that enable start, stop and direction changes. EXIT | 00:00 |
3.	After reading the text, return to the previous display by pressing EXIT.	LOC ↻PAR GROUPS——10 01 OPERATING DATA 03 FB ACTUAL SIGNALS 04 FAULT HISTORY 10 START/STOP/DIR 11 REFERENCE SELECT EXIT | 00:00 | SEL

How to find out the panel version

Step	Action	Display
1.	If the power is switched on, switch it off.	
2.	Keep key (?) pressed down while you switch on the power and read the information. The display shows the following panel information: Panel SW: panel firmware version ROM CRC: panel ROM check sum Flash Rev: flash content version Flash content comment. When you release the (?) key, the panel goes to the Output mode.	PANEL VERSION INFO Panel SW: x.xx Rom CRC: xxxxxxxxxx Flash Rev: x.xx xxxxxxxxxxxxxxxxxxxx

How to start, stop and switch between local and remote control

You can start, stop and switch between local and remote control in any mode. To be able to start or stop the drive, the drive must be in local control.

Step	Action	Display
1.	• To switch between remote control (REM shown on the status line) and local control (LOC shown on the status line), press (LOC REM). **Note:** Switching to local control can be disabled with parameter *1606 LOCAL LOCK*. The very first time the drive is powered up, it is in remote control (REM) and controlled through the drive I/O terminals. To switch to local control (LOC) and control the drive using the control panel, press (LOC REM). The result depends on how long you press the key: • If you release the key immediately (the display flashes “Switching to the local control mode”), the drive stops. Set the local control reference as instructed on page *94*. • If you press the key for about two seconds, the drive continues as before. The drive copies the current remote values for the run/stop status and the reference, and uses them as the initial local control settings.	LOC ↻ MESSAGE Switching to the local control mode. 00:00
	• To stop the drive in local control, press (STOP).	The arrow (↻ or ↺) on the status line stops rotating.
	• To start the drive in local control, press (START).	The arrow (↻ or ↺) on the status line starts rotating. It is dotted until the drive reaches the setpoint.

Output mode

In the Output mode, you can:

- monitor actual values of up to three signals in group *01 OPERATING DATA*
- change the direction of the motor rotation
- set the speed, frequency or torque reference
- adjust the display contrast
- start, stop, change the direction and switch between local and remote control.

You get to the Output mode by pressing EXIT repeatedly.

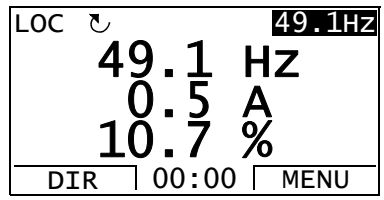

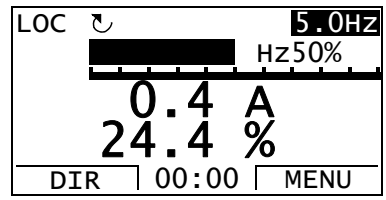

The top right corner of the display shows the reference value. The center can be configured to show up to three signal values or bar graphs. If just one or two signals are selected for display, the number and name of each displayed signal are shown in addition to the value or bar graph. See page *96* for instructions on selecting and modifying the monitored signals.

How to change the direction of the motor rotation

Step	Action	Display
1.	If you are not in the Output mode, press EXIT repeatedly until you get there.	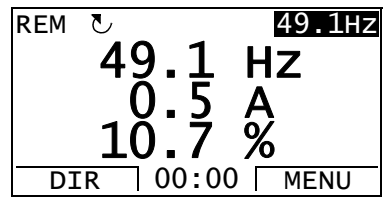
2.	If the drive is in remote control (REM shown on the status line), switch to local control by pressing LOC/REM. The display briefly shows a message about changing the mode and then returns to the Output mode.	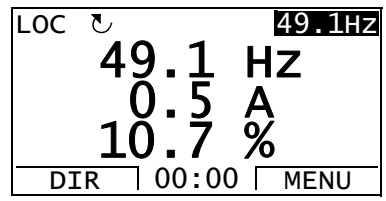
3.	To change the direction from forward (↻ shown on the status line) to reverse (↺ shown on the status line), or vice versa, press DIR. **Note**: Parameter *1003 DIRECTION* must be set to 3 (*REQUEST*).	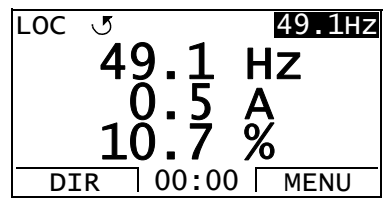

How to set the speed, frequency or torque reference

Step	Action	Display
1.	If you are not in the Output mode, press EXIT repeatedly until you get there.	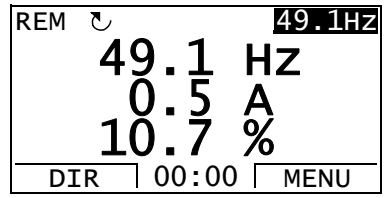
2.	If the drive is in remote control (REM shown on the status line), switch to local control by pressing LOC/REM. The display briefly shows a message about changing the mode and then returns to the Output mode. **Note**: With group *11 REFERENCE SELECT*, you can allow the reference modification in remote control.	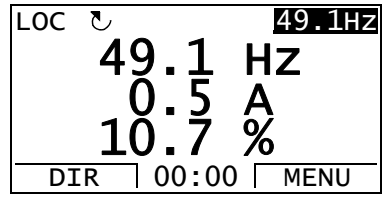
3.	• To increase the highlighted reference value shown in the top right corner of the display, press ▲. The value changes immediately. It is stored in the drive permanent memory and restored automatically after power switch-off. • To decrease the value, press ▼.	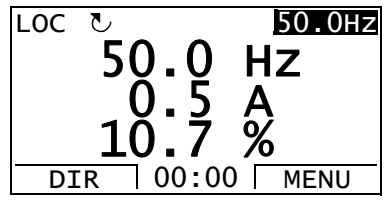

How to adjust the display contrast

Step	Action	Display
1.	If you are not in the Output mode, press EXIT repeatedly until you get there.	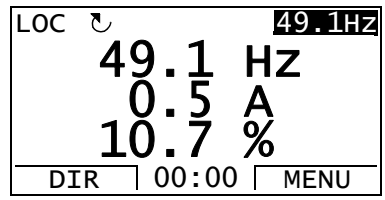
2.	• To increase the contrast, press keys MENU and ▲ simultaneously. • To decrease the contrast, press keys MENU and ▼ simultaneously.	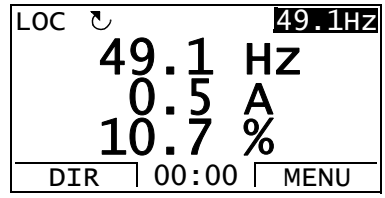

Parameters mode

In the Parameters mode, you can:

- view and change parameter values
- start, stop, change the direction and switch between local and remote control.

How to select a parameter and change its value

Step	Action	Display
1.	Go to the Main menu by pressing MENU if you are in the Output mode, otherwise by pressing repeatedly EXIT until you get to the Main menu.	LOC ↻MAIN MENU———1 **PARAMETERS** ASSISTANTS CHANGED PAR EXIT | 00:00 | ENTER
2.	Go to the Parameters mode by selecting PARAMETERS on the menu with keys ▲ and ▼, and pressing ENTER.	LOC ↻PAR GROUPS——01 **01 OPERATING DATA** 03 FB ACTUAL SIGNALS 04 FAULT HISTORY 10 START/STOP/DIR 11 REFERENCE SELECT EXIT | 00:00 | SEL
3.	Select the appropriate parameter group with keys ▲ and ▼. Press SEL.	LOC ↻PAR GROUPS——99 **99 START-UP DATA** 01 OPERATING DATA 03 FB ACTUAL SIGNALS 04 FAULT HISTORY 10 START/STOP/DIR EXIT | 00:00 | SEL LOC ↻PARAMETERS——— **9901 LANGUAGE** **ENGLISH** 9902 APPLIC MACRO 9903 MOTOR TYPE 9904 MOTOR CTRL MODE EXIT | 00:00 | EDIT
4.	Select the appropriate parameter with keys ▲ and ▼. The current value of the parameter is shown below the selected parameter. Press EDIT.	LOC ↻PARAMETERS——— 9901 LANGUAGE **9902 APPLIC MACRO** **ABB STANDARD** 9903 MOTOR TYPE 9904 MOTOR CTRL MODE EXIT | 00:00 | EDIT LOC ↻PAR EDIT——— 9902 APPLIC MACRO **ABB STANDARD** [1] CANCEL | 00:00 | SAVE
5.	Specify a new value for the parameter with keys ▲ and ▼. Pressing the key once increments or decrements the value. Holding the key down changes the value faster. Pressing the keys simultaneously replaces the displayed value with the default value.	LOC ↻PAR EDIT——— 9902 APPLIC MACRO **3-WIRE** [2] CANCEL | 00:00 | SAVE

Step	Action	Display
6.	• To save the new value, press SAVE. • To cancel the new value and keep the original, press CANCEL.	LOC ↻PARAMETERS 9901 LANGUAGE 9902 APPLIC MACRO 3-WIRE 9903 MOTOR TYPE 9904 MOTOR CTRL MODE EXIT | 00:00 | EDIT

How to select the monitored signals

Step	Action	Display
1.	You can select which signals are monitored in the Output mode and how they are displayed with group *34 PANEL DISPLAY* parameters. See page *95* for detailed instructions on changing parameter values. By default, the display shows three signals. Signal 1: *0102 SPEED* for macros 3-wire, Alternate, Motor potentiometer, Hand/Auto and PID control; *0103 OUTPUT FREQ* for macros ABB standard and Torque control Signal 2: *0104 CURRENT* Signal 3: *0105 TORQUE*. To change the default signals, select up to three signals from group *01 OPERATING DATA* to be shown. Signal 1: Change the value of parameter *3401 SIGNAL1 PARAM* to the index of the signal parameter in group *01 OPERATING DATA* (= number of the parameter without the leading zero), eg 105 means parameter *0105 TORQUE*. Value 0 means that no signal is displayed. Repeat for signals 2 (*3408 SIGNAL2 PARAM*) and 3 (*3415 SIGNAL3 PARAM*).	LOC ↻PAR EDIT 3401 SIGNAL1 PARAM OUTPUT FREQ [103] CANCEL | 00:00 | SAVE LOC ↻PAR EDIT 3408 SIGNAL2 PARAM CURRENT [104] CANCEL | 00:00 | SAVE LOC ↻PAR EDIT 3415 SIGNAL3 PARAM TORQUE [105] CANCEL | 00:00 | SAVE
2.	Select how you want the signals to be displayed: as a decimal number or a bar graph. For decimal numbers, you can specify the decimal point location, or use the decimal point location and unit of the source signal (setting 9 [*DIRECT*]). For details, see parameter *3404*. Signal 1: parameter *3404 OUTPUT1 DSP FORM* Signal 2: parameter *3411 OUTPUT2 DSP FORM* Signal 3: parameter *3418 OUTPUT3 DSP FORM*.	LOC ↻PAR EDIT 3404 OUTPUT1 DSP FORM DIRECT [9] CANCEL | 00:00 | SAVE
3.	Select the units to be displayed for the signals. This has no effect if parameter *3404*/*3411*/*3418* is set to 9 (*DIRECT*). For details, see parameter *3405*. Signal 1: parameter *3405 OUTPUT1 UNIT* Signal 2: parameter *3412 OUTPUT2 UNIT* Signal 3: parameter *3419 OUTPUT3 UNIT*.	LOC ↻PAR EDIT 3405 OUTPUT1 UNIT Hz [3] CANCEL | 00:00 | SAVE

Step	Action	Display
4.	Select the scalings for the signals by specifying the minimum and maximum display values. This has no effect if parameter *3404*/*3411*/*3418* is set to 9 (*DIRECT*). For details, see parameters *3406* and *3407*. Signal 1: parameters *3406 OUTPUT1 MIN* and *3407 OUTPUT1 MAX* Signal 2: parameters *3413 OUTPUT2 MIN* and *3414 OUTPUT2 MAX* Signal 3: parameters *3420 OUTPUT3 MIN* and *3421 OUTPUT3 MAX*.	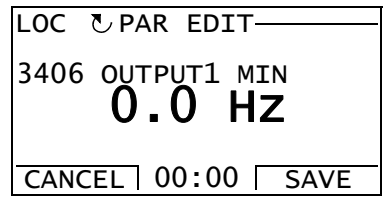 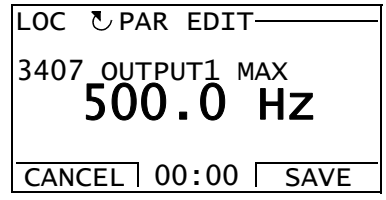

Assistants mode

When the drive is first powered up, the Start-up assistant guides you through the setup of the basic parameters. The Start-up assistant is divided into assistants, each of which is responsible for the specification of a related parameter set, for example Motor set-up or PID control. The Start-up assistant activates the assistants one after the other. You may also use the assistants independently. For more information on the tasks of the assistants, see section *Start-up assistant* on page *121*.

In the Assistants mode, you can:

- use assistants to guide you through the specification of a set of basic parameters
- start, stop, change the direction and switch between local and remote control.

How to use an assistant

The table below shows the basic operation sequence which leads you through assistants. The Motor set-up assistant is used as an example.

Step	Action	Display
1.	Go to the Main menu by pressing MENU if you are in the Output mode, otherwise by pressing repeatedly EXIT until you get to the Main menu.	LOC ↻MAIN MENU———1 **PARAMETERS** ASSISTANTS CHANGED PAR EXIT | 00:00 | ENTER
2.	Go to the Assistants mode by selecting ASSISTANTS on the menu keys ▲ and ▼, and pressing ENTER.	LOC ↻ASSISTANTS———1 **Start-up assistant** Motor Set-up Application Speed control EXT1 Speed control EXT2 EXIT | 00:00 | SEL
3.	Select the assistant with keys ▲ and ▼, and press SEL. If you select any other assistant than the Start-up assistant, it guides you through the task of specification of its parameter set as shown in steps *4.* and *5.* below. After that you can select another assistant on the Assistants menu or exit the Assistants mode. The Motor set-up assistant is used here as an example. If you select the Start-up assistant, it activates the first assistant, which guides you through the task of specification of its parameter set as shown in steps *4.* and *5.* below. The Start-up assistant then asks if you want to continue with the next assistant or skip it – select the appropriate answer with keys ▲ and ▼, and press SEL. If you choose to skip, the Start-up assistant asks the same question about the next assistant, and so on.	LOC ↻PAR EDIT——— 9905 MOTOR NOM VOLT 200 V EXIT | 00:00 | SAVE LOC ↻CHOICE——— Do you want to continue with application setup? **Continue** Skip EXIT | 00:00 | OK

Step	Action	Display
4.	• To specify a new value, press keys ▲ and ▼.	LOC ↻PAR EDIT 9905 MOTOR NOM VOLT 240 V EXIT | 00:00 | SAVE
	• To ask for information on the requested parameter, press key ?. Scroll the help text with keys ▲ and ▼. Close the help by pressing EXIT.	LOC ↻HELP Set as given on the motor nameplate. Voltage value must correspond to motor D/Y connection. EXIT | 00:00
5.	• To accept the new value and continue to the setting of the next parameter, press SAVE. • To stop the assistant, press EXIT.	LOC ↻PAR EDIT 9906 MOTOR NOM CURR 1.2 A EXIT | 00:00 | SAVE

Changed parameters mode

In the Changed parameters mode, you can:

- view a list of all parameters that have been changed from the macro default values
- change these parameters
- start, stop, change the direction and switch between local and remote control.

How to view and edit changed parameters

Step	Action	Display
1.	Go to the Main menu by pressing MENU if you are in the Output mode, otherwise by pressing repeatedly EXIT until you get to the Main menu.	
2.	Go to the Changed parameters mode by selecting CHANGED PAR on the menu with keys ▲ and ▼, and pressing ENTER.	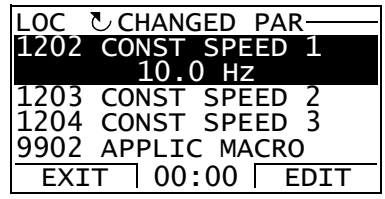
3.	Select the changed parameter on the list with keys ▲ and ▼. The value of the selected parameter is shown below it. Press EDIT to modify the value.	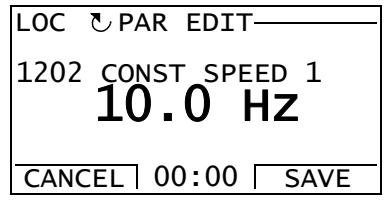
4.	Specify a new value for the parameter with keys ▲ and ▼. Pressing the key once increments or decrements the value. Holding the key down changes the value faster. Pressing the keys simultaneously replaces the displayed value with the default value.	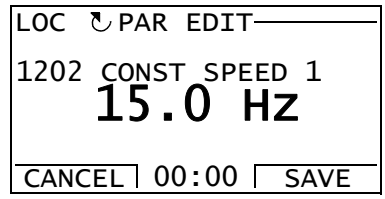
5.	• To accept the new value, press SAVE. If the new value is the default value, the parameter is removed from the list of changed parameters. • To cancel the new value and keep the original, press CANCEL.	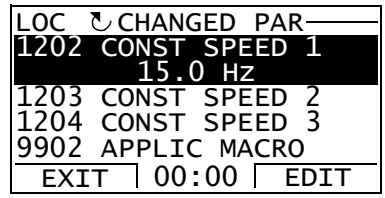

Fault logger mode

In the Fault logger mode, you can:

- view the drive fault history of maximum ten faults (after a power off, only the three latest faults are kept in the memory)
- see the details of the three latest faults (after a power off, the details of only the most recent fault is kept in the memory)
- read the help text for the fault
- start, stop, change the direction and switch between local and remote control.

How to view faults

Step	Action	Display
1.	Go to the Main menu by pressing MENU if you are in the Output mode, otherwise by pressing repeatedly EXIT until you get to the Main menu.	LOC ↻ MAIN MENU 1 PARAMETERS ASSISTANTS CHANGED PAR EXIT | 00:00 | ENTER
2.	Go to the Fault logger mode by selecting FAULT LOGGER on the menu with keys ▲ and ▼, and pressing ENTER. The display shows the fault log starting with the latest fault. The number on the row is the fault code according to which the causes and corrective actions are listed in chapter *Fault tracing* on page *335*.	LOC ↻ FAULT LOGGER 1 10: PANEL LOSS 19.03.05 13:04:57 6: DC UNDERVOLT 7: AI1 LOSS EXIT | 00:00 | DETAIL
3.	To see the details of a fault, select it with keys ▲ and ▼, and press DETAIL.	LOC ↻ PANEL LOSS DI STATUS AT FLT 00000 bin FAULT TIME 1 13:04:57 FAULT TIME 2 EXIT | 00:00 | DIAG
4.	To show the help text, press DIAG. Scroll the help text with keys ▲ and ▼. After reading the help, press OK to return to the previous display.	LOC ↻ DIAGNOSTICS Check: comm lines and connections, parameter 3002, parameters in groups 10 and 11. EXIT | 00:00 | OK

Time and date mode

In the Time and date mode, you can:

- show or hide the clock
- change date and time display formats
- set the date and time
- enable or disable automatic clock transitions according to the daylight saving changes
- start, stop, change the direction and switch between local and remote control.

The assistant control panel contains a battery to ensure the function of the clock when the panel is not powered by the drive.

How to show or hide the clock, change display formats, set the date and time and enable or disable clock transitions due to daylight saving changes

Step	Action	Display
1.	Go to the Main menu by pressing MENU if you are in the Output mode, otherwise by pressing repeatedly EXIT until you get to the Main menu.	
2.	Go to the Time and date mode by selecting TIME & DATE on the menu with keys ▲ and ▼, and pressing ENTER.	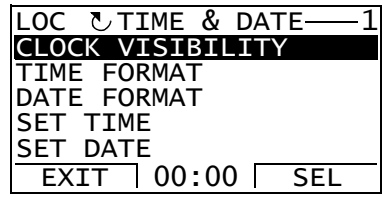
3.	• To show (hide) the clock, select CLOCK VISIBLILITY on the menu, press SEL, select Show clock (Hide clock) and press SEL, or, if you want to return to the previous display without making changes, press EXIT.	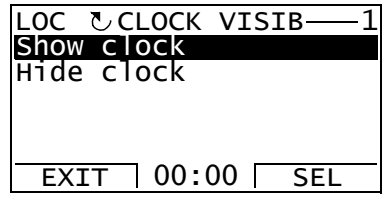
	• To specify the date format, select DATE FORMAT on the menu, press SEL and select a suitable format. Press OK to save or CANCEL to cancel your changes.	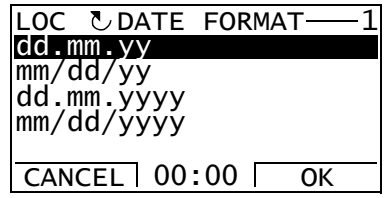
	• To specify the time format, select TIME FORMAT on the menu, press SEL and select a suitable format. Press OK to save or CANCEL to cancel your changes.	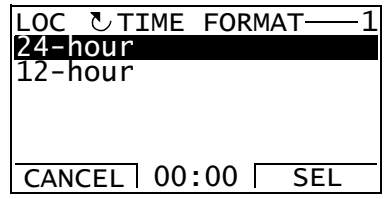

Step	Action	Display
	• To set the time, select SET TIME on the menu and press SEL. Specify the hours with keys ▲ and ▼, and press OK. Then specify the minutes. Press OK to save or CANCEL to cancel your changes.	LOC ↻SET TIME 15:41 CANCEL | 00:00 | OK
	• To set the date, select SET DATE on the menu and press SEL. Specify the first part of the date (day or month depending on the selected date format) with keys ▲ and ▼, and press OK. Repeat for the second part. After specifying the year, press OK. To cancel your changes, press CANCEL.	LOC ↻SET DATE 19.03.05 CANCEL | 00:00 | OK
	• To enable or disable the automatic clock transitions according to the daylight saving changes, select DAYLIGHT SAVING on the menu and press SEL. Pressing ? opens the help that shows the beginning and end dates of the period during which daylight saving time is used in each country or area whose daylight saving changes you can select to be followed. Scroll the help text with keys ▲ and ▼. • To disable automatic clock transitions according to the daylight saving changes, select Off and press SEL. • To enable automatic clock transitions, select the country or area whose daylight saving changes are followed and press SEL. • To return to the previous display without making changes, press EXIT.	LOC ↻DAYLIGHT SAV—1 Off EU US Australia1:NSW,Vict.. Australia2:Tasmania.. EXIT | 00:00 | SEL LOC ↻HELP EU: On: Mar last Sunday Off: Oct last Sunday US: EXIT | 00:00 |

Parameter backup mode

The Parameter backup mode is used to export parameters from one drive to another or to make a backup of the drive parameters. Uploading to the panel stores all drive parameters, including up to three user sets, to the assistant control panel. The full set, partial parameter set (application) and user sets can then be downloaded from the control panel to another drive or the same drive. Uploading and downloading can be performed in local control.

The control panel memory is non-volatile and does not depend on the panel battery.

In the Parameter backup mode, you can:

- Copy all parameters from the drive to the control panel (UPLOAD TO PANEL). This includes all defined user sets of parameters and internal (not adjustable by the user) parameters such as those created by the ID run.
- View the information about the backup stored to the control panel with UPLOAD TO PANEL (BACKUP INFO). This includes eg the type and rating of the drive where the backup was made. It is useful to check this information when you are going to copy the parameters to another drive with DOWNLOAD FULL SET to ensure that the drives match.
- Restore the full parameter set from the control panel to the drive (DOWNLOAD FULL SET). This writes all parameters, including the internal non-user-adjustable motor parameters, to the drive. It does not include the user sets of parameters.

  Note: Only use this function to restore a drive from a backup or to transfer parameters to systems that are identical to the original system.
- Copy a partial parameter set (part of the full set) from the control panel to a drive (DOWNLOAD APPLICATION). The partial set does not include user sets, internal motor parameters, parameters *9905*…*9909*, *1605*, *1607*, *5201*, nor any group *51 EXT COMM MODULE* and *53 EFB PROTOCOL* parameters.

  The source and target drives and their motor sizes do not need to be the same.
- Copy user set 1 parameters from the control panel to the drive (DOWNLOAD USER SET1). A user set includes group *99 START-UP DATA* parameters and the internal motor parameters.

  The function is only shown on the menu when user set 1 has been first saved using parameter *9902 APPLIC MACRO* (see section *User macros* on page *119*) and then uploaded to the control panel with UPLOAD TO PANEL.
- Copy user set 2 parameters from the control panel to the drive (DOWNLOAD USER SET2). As DOWNLOAD USER SET1 above.
- Copy user set 3 parameters from the control panel to the drive (DOWNLOAD USER SET3). As DOWNLOAD USER SET1 above.
- Start, stop, change the direction and switch between local and remote control.

How to upload and download parameters

For the upload and download functions available, see above. Note that the drive has to be in local control for uploading and downloading.

Step	Action	Display
1.	Go to the Main menu by pressing MENU if you are in the Output mode, otherwise by pressing repeatedly EXIT until you get to the Main menu. – If REM is shown on the status line, press first LOC/REM to switch to local control.	LOC ↻MAIN MENU 1 PARAMETERS ASSISTANTS CHANGED PAR EXIT | 00:00 | ENTER
2.	Go to the Par backup mode by selecting PAR BACKUP on the menu with keys ▲ and ▼, and pressing ENTER.	LOC ↻PAR BACKUP 1 UPLOAD TO PANEL BACKUP INFO DOWNLOAD FULL SET DOWNLOAD APPLICATION DOWNLOAD USER SET1 EXIT | 00:00 | SEL
3.	• To copy all parameters (including user sets and internal parameters) from the drive to the control panel, select UPLOAD TO PANEL on the Par backup menu with keys ▲ and ▼, and press SEL. During the transfer, the display shows the transfer status as a percentage of completion. Press ABORT if you want to stop the operation.	LOC ↻PAR BACKUP Copying parameters 50% ABORT | 00:00
	After the upload is completed, the display shows a message about the completion. Press OK to return to the Par backup menu.	LOC ↻MESSAGE Parameter upload successful OK | 00:00
	• To perform downloads, select the appropriate operation (here DOWNLOAD FULL SET is used as an example) on the Par backup menu with keys ▲ and ▼, and press SEL. The display shows the transfer status as a percentage of completion. Press ABORT if you want to stop the operation.	LOC ↻PAR BACKUP Downloading parameters (full set) 50% ABORT | 00:00
	After the download is completed, the display shows a message about the completion. Press OK to return to the Par backup menu.	LOC ↻MESSAGE Parameter download successfully completed. OK | 00:00

How to view information about the backup

Step	Action	Display
1.	Go to the Main menu by pressing MENU if you are in the Output mode, otherwise by pressing repeatedly EXIT until you get to the Main menu.	LOC ↻MAIN MENU———1 PARAMETERS ASSISTANTS CHANGED PAR EXIT | 00:00 | ENTER
2.	Go to the Par backup mode by selecting PAR BACKUP on the menu with keys ▲ and ▼, and pressing ENTER.	LOC ↻PAR BACKUP———1 UPLOAD TO PANEL BACKUP INFO DOWNLOAD FULL SET DOWNLOAD APPLICATION DOWNLOAD USER SET1 EXIT | 00:00 | SEL
3.	Select BACKUP INFO on the Par backup menu with keys ▲ and ▼, and press SEL. The display shows the following information about the drive where the backup was made: DRIVE TYPE: type of the drive *DRIVE RATING*: rating of the drive in format XXXYZ, where XXX: Nominal current rating. If present, an “A” indicates a decimal point, eg 9A7 means 9.7 A. Y: 2 = 200 V 4 = 400 V Z: i = European loading package n = US loading package *FIRMWARE*: firmware version of the drive. You can scroll the information with keys ▲ and ▼.	LOC ↻BACKUP INFO——— DRIVE TYPE ACS355 3304 DRIVE RATING 9A74i 3301 FIRMWARE EXIT | 00:00 | LOC ↻BACKUP INFO——— ACS355 3304 DRIVE RATING 9A74i 3301 FIRMWARE 241A hex EXIT | 00:00 |
4.	Press EXIT to return to the Par backup menu.	LOC ↻PAR BACKUP———1 UPLOAD TO PANEL BACKUP INFO DOWNLOAD FULL SET DOWNLOAD APPLICATION DOWNLOAD USER SET1 EXIT | 00:00 | SEL

I/O settings mode

In the I/O settings mode, you can:

- check the parameter settings related to any I/O terminal
- edit the parameter setting. For example, if “1103: REF1” is listed under Ain1 (Analog input 1), that is, parameter *1103 REF1 SELECT* has value *AI1*, you can change its value to eg *AI2*. You cannot, however, set the value of parameter *1106 REF2 SELECT* to *AI1*.
- start, stop, change the direction and switch between local and remote control.

How to edit and change parameter settings related to I/O terminals

Step	Action	Display
1.	Go to the Main menu by pressing MENU if you are in the Output mode, otherwise by pressing repeatedly EXIT until you get to the Main menu.	LOC ↻MAIN MENU 1 PARAMETERS ASSISTANTS CHANGED PAR EXIT | 00:00 | ENTER
2.	Go to the I/O settings mode by selecting I/O SETTINGS on the menu with keys ▲ and ▼, and pressing ENTER.	LOC ↻I/O SETTINGS 1 DIGITAL INPUTS (DI) ANALOG INPUTS (AI) RELAY OUTPUTS (ROUT) ANALOG OUTPUTS (AOUT) PANEL EXIT | 00:00 | SEL
3.	Select the I/O group, eg DIGITAL INPUTS, with keys ▲ and ▼, and press SEL. After a brief pause, the display shows the current settings for the selection.	LOC ↻I/O SETTINGS -DI1- 1001:START/STOP (E1) -DI2- 1001:DIR (E1) -DI3- EXIT | 00:00 |
4.	Select the setting (line with a parameter number) with keys ▲ and ▼, and press EDIT.	LOC ↻PAR EDIT 1001 EXT1 COMMANDS DI1,2 [2] CANCEL | 00:00 | SAVE
5.	Specify a new value for the setting with keys ▲ and ▼. Pressing the key once increments or decrements the value. Holding the key down changes the value faster. Pressing the keys simultaneously replaces the displayed value with the default value.	LOC ↻PAR EDIT 1001 EXT1 COMMANDS DI1P,2P [3] CANCEL | 00:00 | SAVE
6.	• To save the new value, press SAVE. • To cancel the new value and keep the original, press CANCEL.	LOC ↻I/O SETTINGS -DI1- 1001:START PLS(E1) -DI2- 1001:STOP PLS (E1) -DI3- EXIT | 00:00 |

10

Application macros

What this chapter contains

The chapter describes the application macros. For each macro, there is a wiring diagram showing the default control connections (digital and analog I/O). The chapter also explains how to save a user macro and how to recall it.

Overview of macros

Application macros are pre-programmed parameter sets. While starting up the drive, the user typically selects one of the macros - the one that is best suited for the purpose - with parameter *9902 APPLIC MACRO*, makes the essential changes and saves the result as a user macro.

The ACS355 has seven standard macros and three user macros. The table below contains a summary of the macros and describes suitable applications.

Macro	Suitable applications
ABB standard	Ordinary speed control applications where no, one, two or three constant speeds are used. Start/stop is controlled with one digital input (level start and stop). It is possible to switch between two acceleration and deceleration times.
3-wire	Ordinary speed control applications where no, one, two or three constant speeds are used. The drive is started and stopped with push buttons.
Alternate	Speed control applications where no, one, two or three constant speeds are used. Start, stop and direction are controlled by two digital inputs (combination of the input states determines the operation).
Motor potentiometer	Speed control applications where no or one constant speed is used. The speed is controlled by two digital inputs (increase / decrease / keep unchanged).

efesotomasyon.com

Macro	Suitable applications
Hand/Auto	Speed control applications where switching between two control devices is needed. Some control signal terminals are reserved for one device, the rest for the other. One digital input selects between the terminals (devices) in use.
PID control	Process control applications, for example different closed loop control systems such as pressure control, level control and flow control. It is possible to switch between process and speed control: Some control signal terminals are reserved for process control, others for speed control. One digital input selects between process and speed control.
Torque control	Torque control applications. It is possible to switch between torque and speed control: Some control signal terminals are reserved for torque control, others for speed control. One digital input selects between torque and speed control.
User	The user can save the customized standard macro, ie the parameter settings including group *99 START-UP DATA*, and the results of the motor identification run into the permanent memory, and recall the data at a later time. For example, three user macros can be used when switching between three different motors is required.

Summary of the I/O connections of the application macros

The following table gives the summary of the default I/O connections of all application macros.

Input/ output	Macro						
	ABB standard	**3-wire**	**Alternate**	**Motor potentiom.**	**Hand/Auto**	**PID control**	**Torque control**
AI1 (0…10 V)	Freq. ref.	Speed ref.	Speed ref.	-	Speed ref. (Hand)	Speed ref. (Hand) / Proc. ref. (PID)	Speed ref. (Speed)
AI2 (0…20 mA)	-	-	-	-	Speed ref. (Auto)	Process value	Torque ref. (Torque)
AO	Output freq.	Speed	Speed	Speed	Speed	Speed	Speed
DI1	Stop/Start	Start (pulse)	Start (fwd)	Stop/Start	Stop/Start (Hand)	Stop/Start (Hand)	Stop/Start (Speed)
DI2	Fwd/Rev	Stop (pulse)	Start (rev)	Fwd/Rev	Fwd/Rev (Hand)	Hand/PID	Fwd/Rev
DI3	Const. speed input 1	Fwd/Rev	Const. speed input 1	Speed ref. up	Hand/Auto	Const. speed 1	Speed/ Torque
DI4	Const. speed input 2	Const. speed input 1	Const. speed input 2	Speed ref. down	Fwd/Rev (Auto)	Run enable	Const. speed 1
DI5	Ramp pair selection	Const. speed input 2	Ramp pair selection	Const. speed 1	Stop/Start (Auto)	Stop/Start (PID)	Ramp pair selection
RO	Fault (-1)	Fault (-1)	Fault (-1)	Fault (-1)	Fault (-1)	Fault (-1)	Fault (-1)
DO	Fault (-1)	Fault (-1)	Fault (-1)	Fault (-1)	Fault (-1)	Fault (-1)	Fault (-1)

ABB standard macro

This is the default macro. It provides a general purpose I/O configuration with three constant speeds. Parameter values are the default values given in section *Parameters* on page *185*.

If you use other than the default connections presented below, see section *I/O terminals* on page *51*.

Default I/O connections

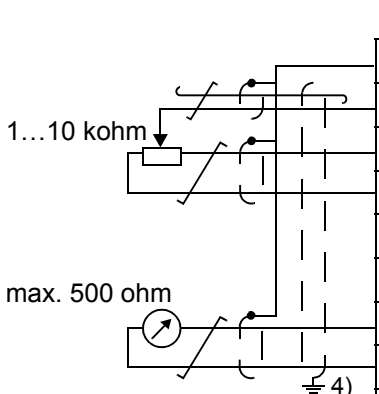

X1A

1	SCR	Signal cable shield (screen)
2	AI1	**Output frequency reference**: 0…10 V [1]
3	GND	Analog input circuit common
4	+10V	Reference voltage: +10 V DC, max. 10 mA
5	AI2	Not in use by default. 0…10 V
6	GND	Analog input circuit common
7	AO	**Output frequency value**: 0…20 mA
8	GND	Analog output circuit common
9	+24V	Auxiliary voltage output: +24 V DC, max. 200 mA
10	GND	Auxiliary voltage output common
11	DCOM	Digital input common
12	DI1	**Stop (0) / Start (1)**
13	DI2	**Forward (0) / Reverse (1)**
14	DI3	**Constant speed selection** [2]
15	DI4	**Constant speed selection** [2]
16	DI5	**Acceleration and deceleration selection** [3]

X1B

17	ROCOM	Relay output 1
18	RONC	**No fault [Fault (-1)]**
19	RONO	
20	DOSRC	Digital output, max. 100 mA
21	DOOUT	**No fault [Fault (-1)]**
22	DOGND	

[1] AI1 is used as a speed reference if vector mode is selected.

[2] See parameter group *12 CONSTANT SPEEDS*:

DI3	DI4	Operation (parameter)
0	0	Set speed through AI1
1	0	Speed 1 (*1202*)
0	1	Speed 2 (*1203*)
1	1	Speed 3 (*1204*)

[3] 0 = ramp times according to parameters *2202* and *2203*.
1 = ramp times according to parameters *2205* and *2206*.

[4] 360 degree grounding under a clamp.

Tightening torque = 0.4 N·m / 3.5 lbf·in.

Safe torque off connections (X1C:STO; not shown in the diagram) are jumpered by default.

3-wire macro

This macro is used when the drive is controlled using momentary push-buttons. It provides three constant speeds. To enable the macro, set the value of parameter *9902 APPLIC MACRO* to 2 (*3-WIRE*).

For the parameter default values, see section *Default values with different macros* on page *176*. If you use other than the default connections presented below, see section *I/O terminals* on page *51*.

Note: When the stop input (DI2) is deactivated (no input), the control panel start and stop buttons are disabled.

Default I/O connections

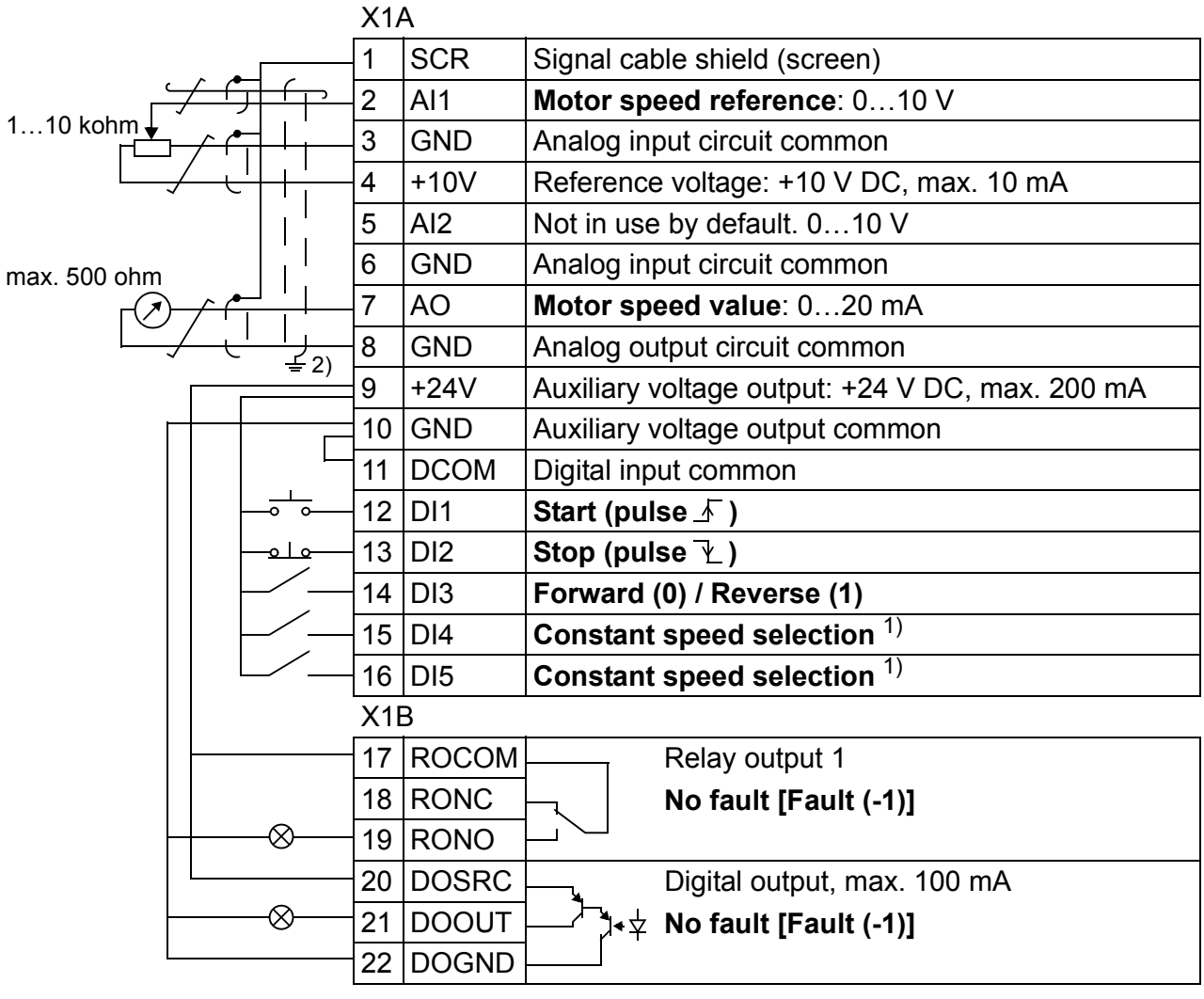

1	SCR	Signal cable shield (screen)
2	AI1	**Motor speed reference**: 0…10 V
3	GND	Analog input circuit common
4	+10V	Reference voltage: +10 V DC, max. 10 mA
5	AI2	Not in use by default. 0…10 V
6	GND	Analog input circuit common
7	AO	**Motor speed value**: 0…20 mA
8	GND	Analog output circuit common
9	+24V	Auxiliary voltage output: +24 V DC, max. 200 mA
10	GND	Auxiliary voltage output common
11	DCOM	Digital input common
12	DI1	**Start (pulse ↗)**
13	DI2	**Stop (pulse ↘)**
14	DI3	**Forward (0) / Reverse (1)**
15	DI4	**Constant speed selection** [1]
16	DI5	**Constant speed selection** [1]

17	ROCOM	Relay output 1
18	RONC	**No fault [Fault (-1)]**
19	RONO	
20	DOSRC	Digital output, max. 100 mA
21	DOOUT	**No fault [Fault (-1)]**
22	DOGND	

[1] See parameter group *12 CONSTANT SPEEDS*:

DI3	DI4	Operation (parameter)
0	0	Set speed through AI1
1	0	Speed 1 (*1202*)
0	1	Speed 2 (*1203*)
1	1	Speed 3 (*1204*)

[2] 360 degree grounding under a clamp.
Tightening torque = 0.4 N·m / 3.5 lbf·in.
Safe torque off connections (X1C:STO; not shown in the diagram) are jumpered by default.

Alternate macro

This macro provides an I/O configuration adapted to a sequence of DI control signals used when alternating the rotation direction of the motor. To enable the macro, set the value of parameter *9902 APPLIC MACRO* to 3 (*ALTERNATE*).

For the parameter default values, see section *Default values with different macros* on page *176*. If you use other than the default connections presented below, see section *I/O terminals* on page *51*.

Default I/O connections

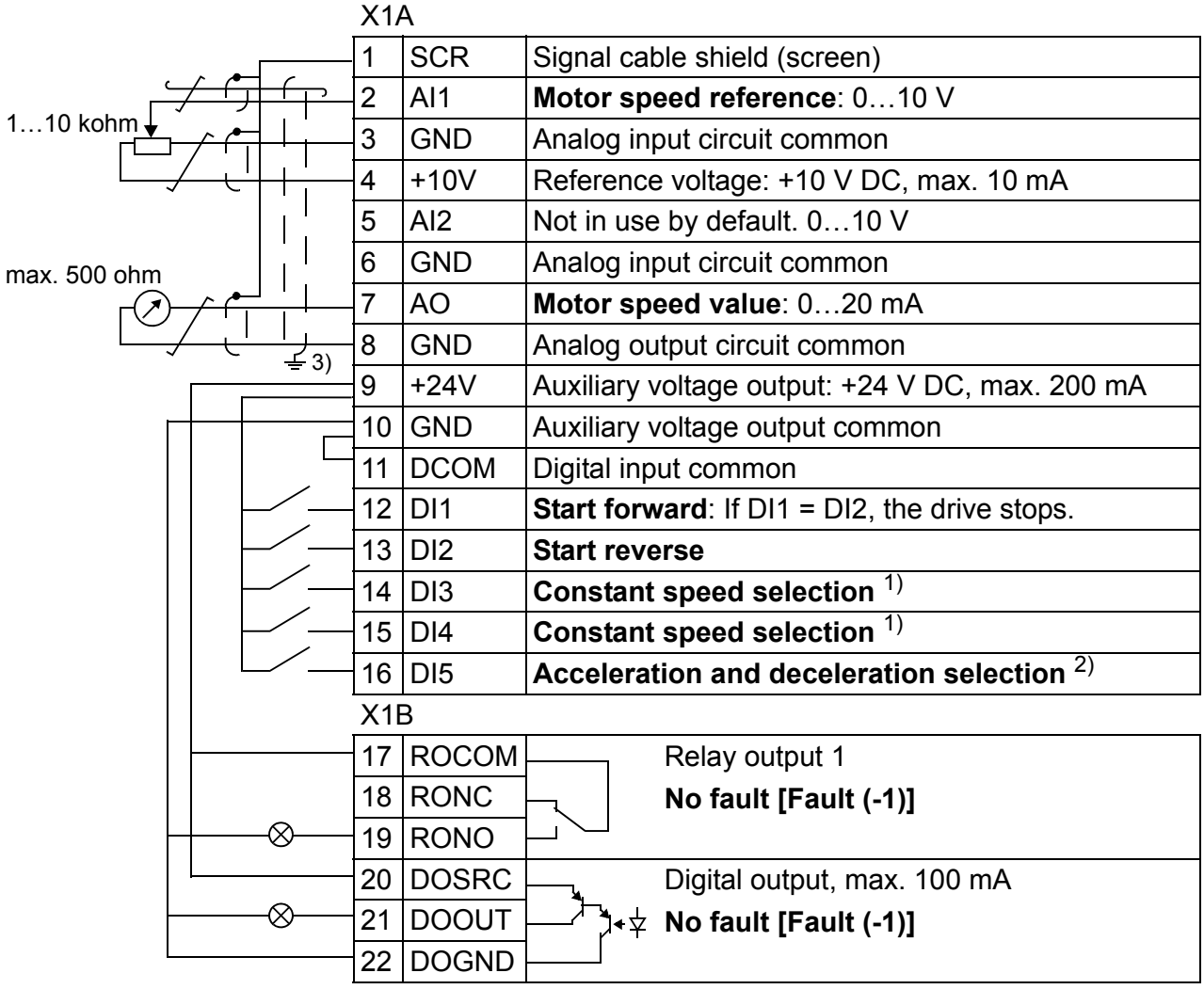

1) See parameter group *12 CONSTANT SPEEDS*:

DI3	DI4	Operation (parameter)
0	0	Set speed through AI1
1	0	Speed 1 (*1202*)
0	1	Speed 2 (*1203*)
1	1	Speed 3 (*1204*)

2) 0 = ramp times according to parameters *2202* and *2203*.
1 = ramp times according to parameters *2205* and *2206*.

3) 360 degree grounding under a clamp.

Tightening torque = 0.4 N·m / 3.5 lbf·in.

Safe torque off connections (X1C:STO; not shown in the diagram) are jumpered by default.

Motor potentiometer macro

This macro provides a cost-effective interface for PLCs that vary the speed of the motor using only digital signals. To enable the macro, set the value of parameter *9902 APPLIC MACRO* to 4 (*MOTOR POT*).

For the parameter default values, see section *Default values with different macros* on page *176*. If you use other than the default connections presented below, see section *I/O terminals* on page *51*.

Default I/O connections

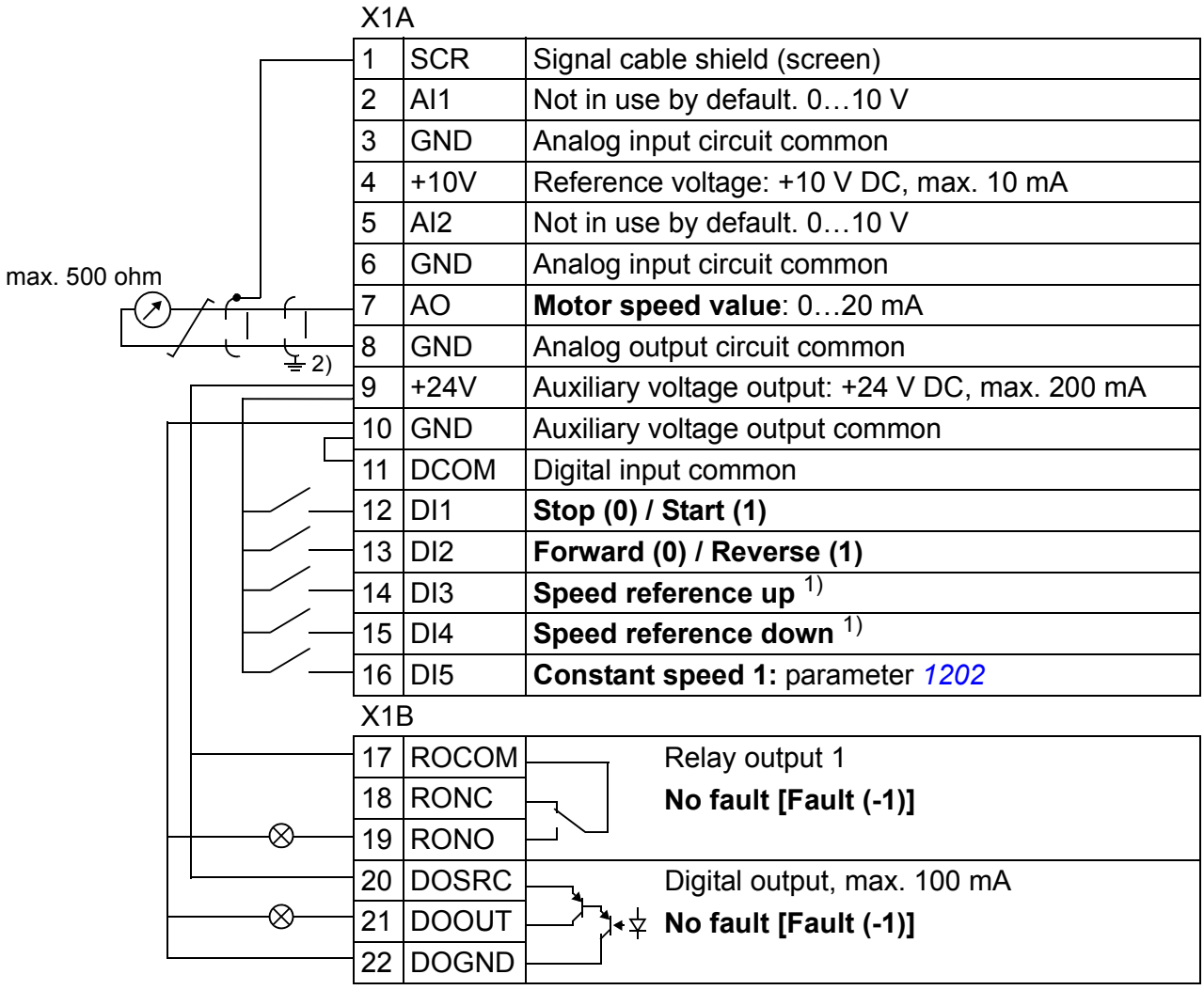

1) If DI3 and DI4 are both active or inactive, the speed reference is unchanged.

The existing speed reference is stored during stop and power down.

2) 360 degree grounding under a clamp.

Tightening torque = 0.4 N·m / 3.5 lbf·in.

Safe torque off connections (X1C:STO; not shown in the diagram) are jumpered by default.

Hand/Auto macro

This macro can be used when switching between two external control devices is needed. To enable the macro, set the value of parameter *9902 APPLIC MACRO* to 5 (*HAND/AUTO*).

For the parameter default values, see section *Default values with different macros* on page *176*. If you use other than the default connections presented below, see section *I/O terminals* on page *51*.

Note: Parameter *2108 START INHIBIT* must remain in the default setting 0 (*OFF*).

Default I/O connections

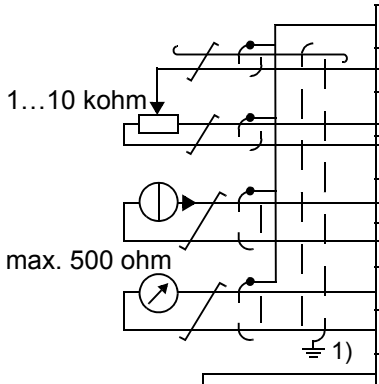

X1A

1	SCR	Signal cable shield (screen)
2	AI1	**Motor speed reference (Hand)**: 0…10 V
3	GND	Analog input circuit common
4	+10V	Reference voltage: +10 V DC, max. 10 mA
5	AI2	**Motor speed reference (Auto)**: 0…20 mA [2]
6	GND	Analog input circuit common
7	AO	**Motor speed value**: 0…20 mA
8	GND	Analog output circuit common
9	+24V	Auxiliary voltage output: +24 V DC, max. 200 mA
10	GND	Auxiliary voltage output common
11	DCOM	Digital input common
12	DI1	**Stop (0) / Start (1) (Hand)**
13	DI2	**Forward (0) / Reverse (1) (Hand)**
14	DI3	**Hand (0) / Auto (1) control selection**
15	DI4	**Forward (0) / Reverse (1) (Auto)**
16	DI5	**Stop (0) / Start (1) (Auto)**

X1B

17	ROCOM	Relay output 1
18	RONC	**No fault [Fault (-1)]**
19	RONO	
20	DOSRC	Digital output, max. 100 mA
21	DOOUT	**No fault [Fault (-1)]**
22	DOGND	

1) 360 degree grounding under a clamp. Tightening torque = 0.4 N·m / 3.5 lbf·in.

2) The signal source is powered externally. See the manufacturer's instructions. To use sensors supplied by the drive aux. voltage output, see page *53*.

Safe torque off connections (X1C:STO; not shown in the diagram) are jumpered by default.

PID control macro

This macro provides parameter settings for closed-loop control systems such as pressure control, flow control, etc. Control can also be switched to speed control using a digital input. To enable the macro, set the value of parameter *9902 APPLIC MACRO* to 6 (*PID CONTROL*).

For the parameter default values, see section *Default values with different macros* on page *176*. If you use other than the default connections presented below, see section *I/O terminals* on page *51*.

Note: Parameter *2108 START INHIBIT* must remain in the default setting 0 (*OFF*).

Default I/O connections

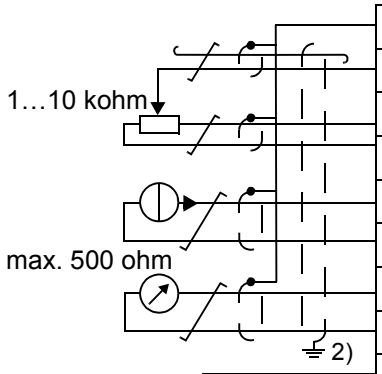

X1A		
1	SCR	Signal cable shield (screen)
2	AI1	**Motor speed ref. (Hand) / Proc. ref. (PID)**: 0…10 V [1]
3	GND	Analog input circuit common
4	+10V	Reference voltage: +10 V DC, max. 10 mA
5	AI2	**Process actual value**: 4…20 mA [3]
6	GND	Analog input circuit common
7	AO	**Motor speed value**: 0…20 mA
8	GND	Analog output circuit common
9	+24V	Auxiliary voltage output: +24 V DC, max. 200 mA
10	GND	Auxiliary voltage output common
11	DCOM	Digital input common
12	DI1	**Stop (0) / Start (1) (Hand)**
13	DI2	**Hand (0) / PID (1) control selection**
14	DI3	**Constant speed 1**: parameter *1202*
15	DI4	**Run enable**
16	DI5	**Stop (0) / Start (1) (PID)**
X1B		
17	ROCOM	Relay output 1
18	RONC	**No fault [Fault (-1)]**
19	RONO	
20	DOSRC	Digital output, max. 100 mA
21	DOOUT	**No fault [Fault (-1)]**
22	DOGND	

[1] Hand: 0…10 V -> speed reference.
PID: 0…10 V -> 0…100% PID setpoint.

[2] 360 degree grounding under a clamp.

[3] The signal source is powered externally. See the manufacturer's instructions. To use sensors supplied by the drive aux. voltage output, see page *53*.

Tightening torque = 0.4 N·m / 3.5 lbf·in.

Safe torque off connections (X1C:STO; not shown in the diagram) are jumpered by default.

Torque control macro

This macro provides parameter settings for applications that require torque control of the motor. Control can also be switched to speed control using a digital input. To enable the macro, set the value of parameter *9902 APPLIC MACRO* to 8 (*TORQUE CTRL*).

For the parameter default values, see section *Default values with different macros* on page *176*. If you use other than the default connections presented below, see section *I/O terminals* on page *51*.

Default I/O connections

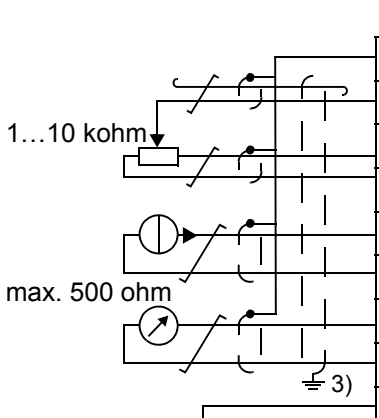

X1A

1	SCR	Signal cable shield (screen)
2	AI1	**Motor speed reference (Speed)**: 0…10 V
3	GND	Analog input circuit common
4	+10V	Reference voltage: +10 V DC, max. 10 mA
5	AI2	**Motor torque reference (Torque)**: 4…20 mA [4]
6	GND	Analog input circuit common
7	AO	**Motor speed value**: 0…20 mA
8	GND	Analog output circuit common
9	+24V	Auxiliary voltage output: +24 V DC, max. 200 mA
10	GND	Auxiliary voltage output common
11	DCOM	Digital input common
12	DI1	**Stop (0) / Start (1) (Speed)**
13	DI2	**Forward (0) / Reverse (1)** [1]
14	DI3	**Speed (0) / Torque (1) control selection**
15	DI4	**Constant speed 1**: parameter *1202*
16	DI5	**Acceleration and deceleration selection** [2]

X1B

17	ROCOM	Relay output 1
18	RONC	**No fault [Fault (-1)]**
19	RONO	
20	DOSRC	Digital output, max. 100 mA
21	DOOUT	**No fault [Fault (-1)]**
22	DOGND	

[1] Speed control: Changes rotation direction.
Torque control: Changes torque direction.

[2] 0 = ramp times according to parameters *2202* and *2203*.
1 = ramp times according to parameters *2205* and *2206*.

[3] 360 degree grounding under a clamp.

[4] The signal source is powered externally. See the manufacturer's instructions. To use sensors supplied by the drive aux. voltage output, see page *53*.

Tightening torque = 0.4 N·m / 3.5 lbf·in.

Safe torque off connections (X1C:STO; not shown in the diagram) are jumpered by default.

User macros

In addition to the standard application macros, it is possible to create three user macros. The user macro allows the user to save the parameter settings, including group *99 START-UP DATA*, and the results of the motor identification into the permanent memory and recall the data at a later time. The panel reference is also saved if the macro is saved and loaded in local control. The remote control setting is saved into the user macro, but the local control setting is not.

The steps below show how to create and recall User macro 1. The procedure for the other two macros is identical, only the parameter *9902 APPLIC MACRO* values are different.

To create User macro 1:

- Adjust the parameters. Perform the motor identification if it is needed in the application but it is not done yet.
- Save the parameter settings and the results of the motor identification to the permanent memory by changing parameter *9902 APPLIC MACRO* to -1 (*USER S1 SAVE*).
- Press SAVE (assistant control panel) or MENU ENTER (basic control panel) to save.

To recall User macro 1:

- Change parameter *9902 APPLIC MACRO* to 0 (*USER S1 LOAD*).
- Press SAVE (assistant control panel) or MENU ENTER (basic control panel) to load.

The user macro can also be switched through digital inputs (see parameter *1605 USER PAR SET CHG*).

Note: User macro load restores the parameter settings, including group *99 START-UP DATA* and the results of the motor identification. Check that the settings correspond to the motor used.

Hint: The user can for example switch the drive between three motors without having to adjust the motor parameters and to repeat the motor identification every time the motor is changed. The user needs only to adjust the settings and perform the motor identification once for each motor and then to save the data as three user macros. When the motor is changed, only the corresponding user macro needs to be loaded, and the drive is ready to operate.

11

Program features

What this chapter contains

The chapter describes program features. For each feature, there is a list of related user settings, actual signals, and fault and alarm messages.

Start-up assistant

Introduction

The Start-up assistant (requires the assistant control panel) guides the user through the start-up procedure, helping to enter the requested data (parameter values) to the drive. The Start-up assistant also checks that the entered values are valid, ie within the allowed range.

The Start-up assistant calls other assistants, each of which guides the user through the task of specifying a related parameter set. At the first start, the drive suggests entering the first task, Language select, automatically. The user may activate the tasks either one after the other as the Start-up assistant suggests, or independently. The user may also adjust the drive parameters in the conventional way without using the assistant at all.

See section *Assistants mode* on page *98* for how to start the Start-up assistant or other assistants.

Default order of the tasks

Depending on the selection made in the Application task (parameter *9902 APPLIC MACRO*), the Start-up assistant decides which consequent tasks it suggests. The default tasks are shown in the table below.

Application selection	Default tasks
ABB STANDARD	Language select, Motor set-up, Application, Option modules, Speed control EXT1, Speed control EXT2, Start/Stop control, Timed functions, Protections, Output signals
3-WIRE	Language select, Motor set-up, Application, Option modules, Speed control EXT1, Speed control EXT2, Start/Stop control, Timed functions, Protections, Output signals
ALTERNATE	Language select, Motor set-up, Application, Option modules, Speed control EXT1, Speed control EXT2, Start/Stop control, Timed functions, Protections, Output signals
MOTOR POT	Language select, Motor set-up, Application, Option modules, Speed control EXT1, Speed control EXT2, Start/Stop control, Timed functions, Protections, Output signals
HAND/AUTO	Language select, Motor set-up, Application, Option modules, Speed control EXT1, Speed control EXT2, Start/Stop control, Timed functions, Protections, Output signals
PID CONTROL	Language select, Motor set-up, Application, Option modules, PID control, Speed control EXT2, Start/Stop control, Timed functions, Protections, Output signals
TORQUE CTRL	Language select, Motor set-up, Application, Option modules, Speed control EXT2, Start/Stop control, Timed functions, Protections, Output signals

List of the tasks and the relevant drive parameters

Depending on the selection made in the Application task (parameter *9902 APPLIC MACRO*), the Start-up assistant decides which consequent tasks it suggests.

Name	Description	Set parameters
Language select	Selecting the language	*9901*
Motor set-up	Setting the motor data Performing the motor identification. (If the speed limits are not in the allowed range: Setting the limits.)	*9904*…*9909* *9910*
Application	Selecting the application macro	*9902*, parameters associated to the macro
Option modules	Activating the option modules	Group *35 MOTOR TEMP MEAS*, group *52 PANEL COMM* *9802*
Speed control EXT1	Selecting the source for the speed reference (If AI1 is used: Setting analog input AI1 limits, scale, inversion) Setting the reference limits Setting the speed (frequency) limits Setting the acceleration and deceleration times	*1103* (*1301*…*1303*, *3001*) *1104*, *1105* *2001*, *2002* (*2007*, *2008*) *2202*, *2203*
Speed control EXT2	Selecting the source for the speed reference (If AI1 is used: Setting analog input AI1 limits, scale, inversion) Setting the reference limits	*1106* (*1301*…*1303*, *3001*) *1107*, *1108*
Torque control	Selecting the source for the torque reference (If AI1 is used: Setting analog input AI1 limits, scale, inversion) Setting the reference limits Setting the torque ramp up and ramp down times	*1106* (*1301*…*1303*, *3001*) *1107*, *1108* *2401*, *2402*
PID control	Selecting the source for the process reference (If AI1 is used: Setting analog input AI1 limits, scale, inversion) Setting the reference limits Setting the speed (frequency) limits Setting the source and limits for the process actual value	*1106* (*1301*…*1303*, *3001*) *1107*, *1108* *2001*, *2002* (*2007*, *2008*) *4016*, *4018*, *4019*

Name	Description	Set parameters
Start/Stop control	Selecting the source for start and stop signals of the two external control locations, EXT1 and EXT2	*1001*, *1002*
	Selecting between EXT1 and EXT2	*1102*
	Defining the direction control	*1003*
	Defining the start and stop modes	*2101*…*2103*
	Selecting the use of Run enable signal	*1601*
Protections	Setting the current and torque limits	*2003*, *2017*
Output signals	Selecting the signals indicated through relay output RO1 and, if MREL-01 relay output extension module is in use, RO2…RO4.	Group *14 RELAY OUTPUTS*
	Selecting the signals indicated through analog output AO	Group *15 ANALOG OUTPUTS*
	Setting the minimum, maximum, scaling and inversion	
Timed functions	Setting the timed functions	*36 TIMED FUNCTIONS*
	Selecting the timed start/stop control for external control locations EXT1 and EXT2	*1001*, *1002*
	Selecting timed EXT1/EXT2 control	*1102*
	Activation of timed constant speed 1	*1201*
	Selecting timed function status indicated through relay output RO1 or, if MREL-01 relay output extension module is in use, RO2…RO4.	*1401*…*1403*, *1410*
	Selecting timed PID1 parameter set 1/2 control	*4027*

Contents of the assistant displays

There are two types of displays in the Start-up assistant: Main displays and information displays. The main displays prompt the user to feed in information. The assistant steps through the main displays. The information displays contain help texts for the main displays. The figure below shows a typical example of both and explanations of the contents.

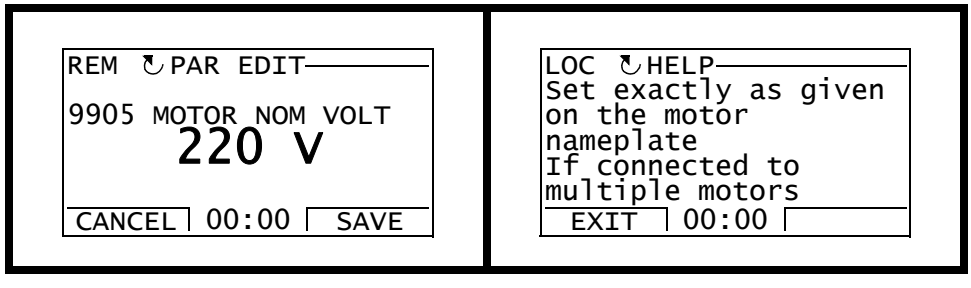

1	Parameter	Help text …
2	Feed-in field	… help text continued

Local control vs. external control

The drive can receive start, stop and direction commands and reference values from the control panel or through digital and analog inputs. Embedded fieldbus or an optional fieldbus adapter enables control over an open fieldbus link. A PC equipped with the DriveWindow Light 2 PC tool can also control the drive.

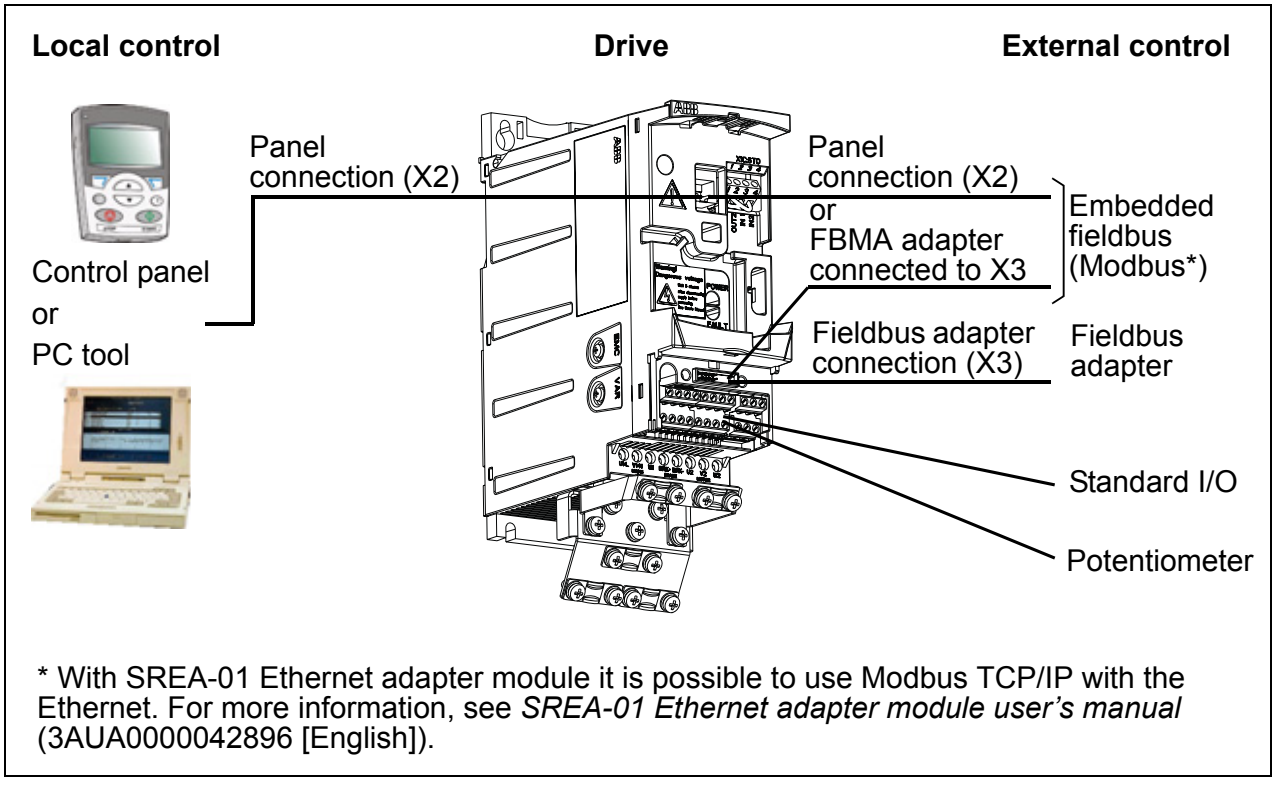

* With SREA-01 Ethernet adapter module it is possible to use Modbus TCP/IP with the Ethernet. For more information, see *SREA-01 Ethernet adapter module user's manual* (3AUA0000042896 [English]).

Local control

The control commands are given from the control panel keypad when the drive is in local control. LOC indicates local control on the panel display.

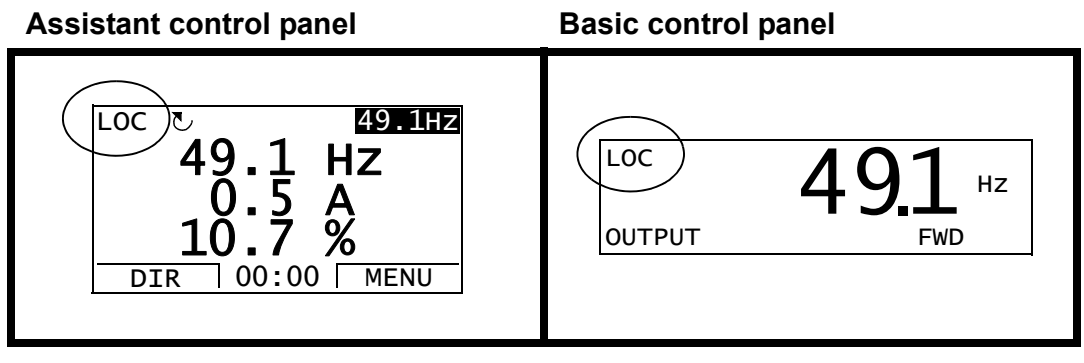

The control panel always overrides the external control signal sources when used in local control.

External control

When the drive is in external (remote) control, the commands are given through the standard I/O terminals (digital and analog inputs) and/or the fieldbus interface. In addition, it is also possible to set the control panel as the source for the external control.

External control is indicated with REM on the panel display.

Assistant control panel **Basic control panel**

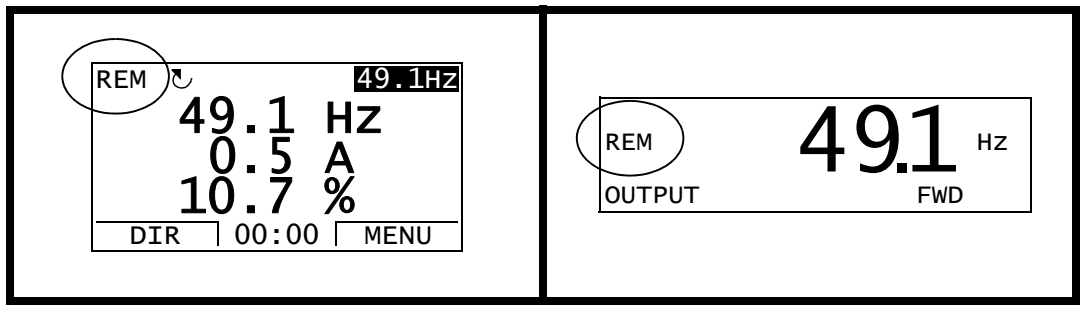

The user can connect the control signals to two external control locations, *EXT1* or *EXT2*. Depending on the user selection, either one is active at a time. This function operates on a 2 ms time level.

Settings

Panel key	**Additional information**
LOC/REM	Selection between local and external (remote) control
Parameter	
1102	Selection between *EXT1* and *EXT2*
1001/*1002*	Start, stop, direction source for *EXT1*/*EXT2*
1103/*1106*	Reference source for *EXT1*/*EXT2*

Diagnostics

Actual signal	**Additional information**
0111/*0112*	*EXT1*/*EXT2* reference

Block diagram: Start, stop, direction source for *EXT1*

The figure below shows the parameters that select the interface for start, stop, and direction for external control location *EXT1*.

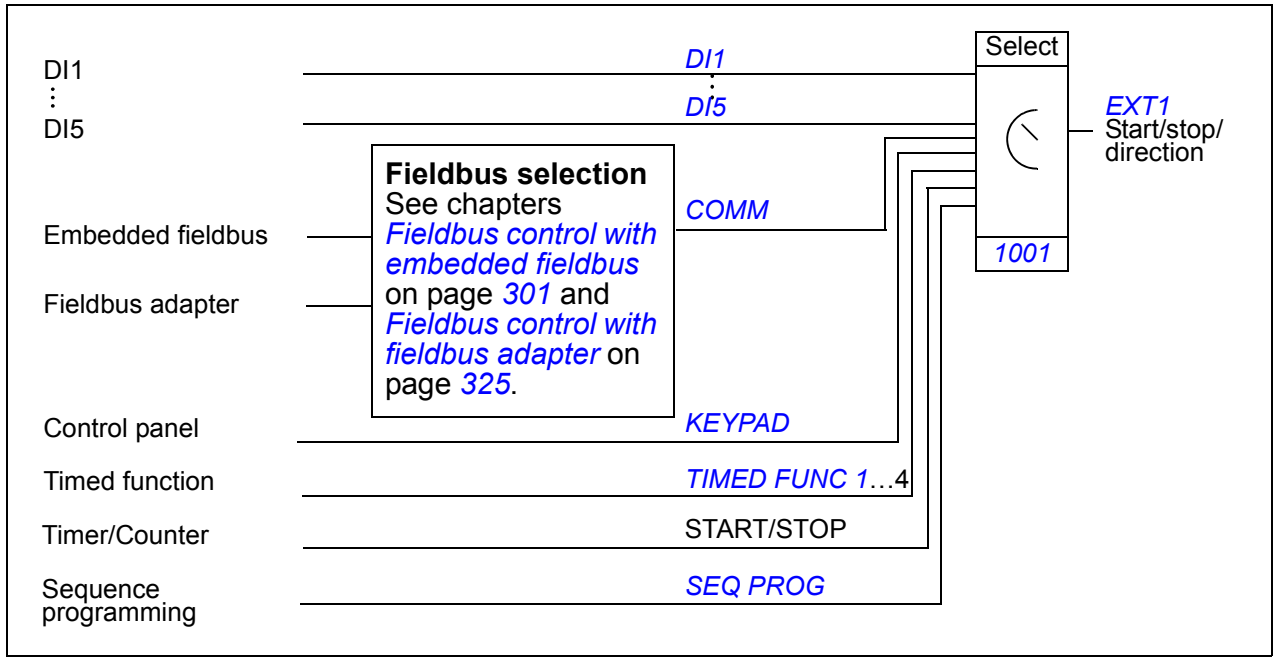

Block diagram: Reference source for *EXT1*

The figure below shows the parameters that select the interface for the speed reference of external control location *EXT1*.

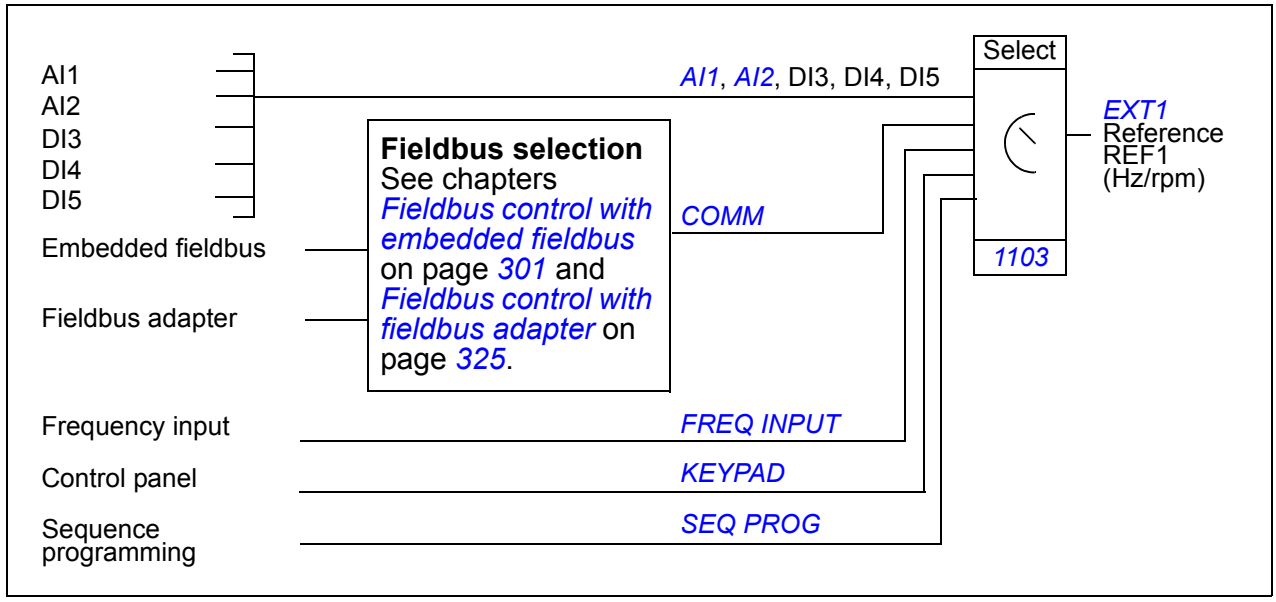

Reference types and processing

The drive can accept a variety of references in addition to the conventional analog input and control panel signals.

- The drive reference can be given with two digital inputs: One digital input increases the speed, the other decreases it.
- The drive can form a reference out of two analog input signals by using mathematical functions: addition, subtraction, multiplication and division.
- The drive can form a reference out of an analog input signal and a signal received through a serial communication interface by using mathematical functions: addition and multiplication.
- The drive reference can be given with frequency input.
- In external control location EXT1/2, the drive can form a reference out of an analog input signal and a signal received through Sequence programming by using a mathematical function: addition.

It is possible to scale the external reference so that the signal minimum and maximum values correspond to a speed other than the minimum and maximum speed limits.

Settings

Parameter	Additional information
Group *11 REFERENCE SELECT*	External reference source, type and scaling
Group *20 LIMITS*	Operating limits
Group *22 ACCEL/DECEL*	Speed reference acceleration/deceleration ramps
Group *24 TORQUE CONTROL*	Torque reference ramp times
Group *32 SUPERVISION*	Reference supervision

Diagnostics

Actual signal	Additional information
0111/*0112*	REF1/REF2 reference
Group *03 FB ACTUAL SIGNALS*	References in different stages of the reference processing chain

Reference trimming

In reference trimming, the external reference is corrected depending on the measured value of a secondary application variable. The block diagram below illustrates the function.

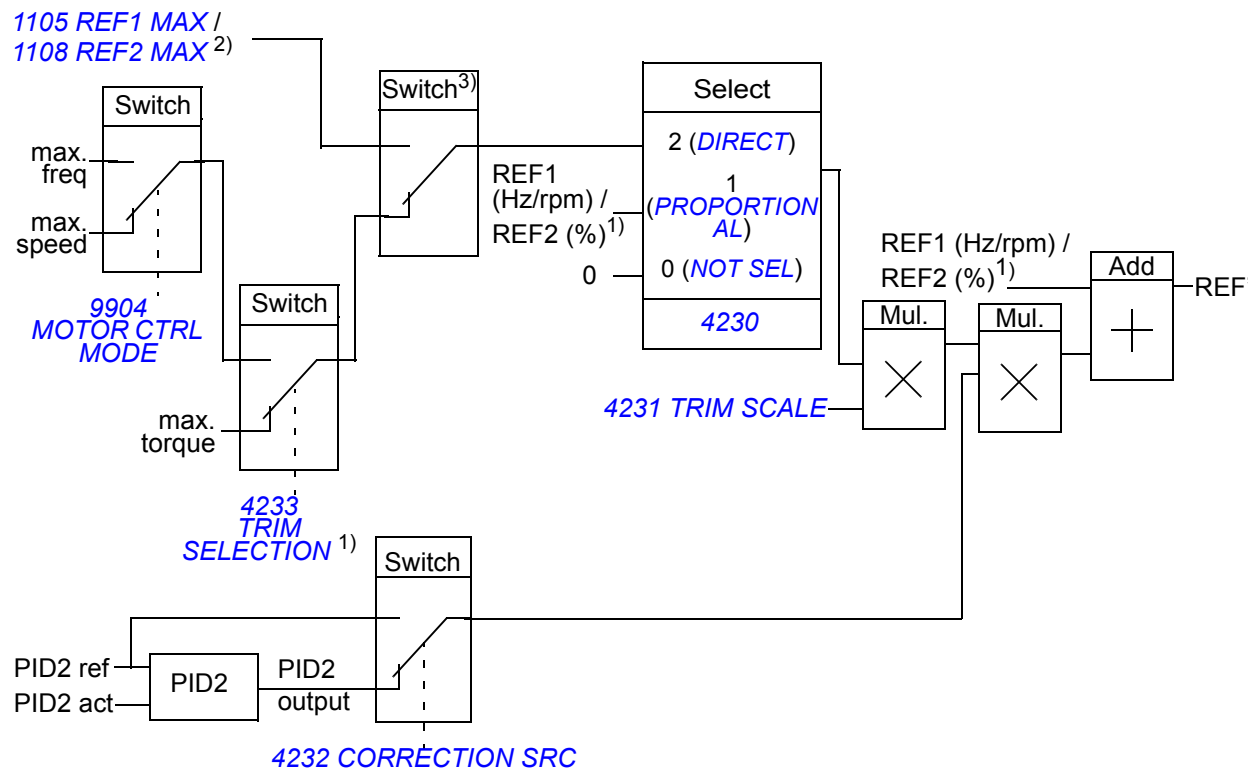

REF1 (Hz/rpm) / REF2 (%) = Drive reference before trimming
REF' = Drive reference after trimming
max. speed = par. *2002* (or *2001* if the absolute value is greater)
max. freq = par. *2008* (or *2007* if the absolute value is greater)
max. torque = par. *2014* (or *2013* if the absolute value is greater)
PID2 ref = par. *4210*
PID2 act = par. *4214*…*4221*

1) **Note:** Torque reference trimming is only for external reference REF2 (%)

2) REF1 or REF2 depending on which is active. See parameter *1102*.

3) When par. *4232* = *PID2REF*, the maximum trimming reference is defined by parameter *1105* when REF1 is active and by parameter *1108* when REF2 is active.
When par. *4232* = *PID2OUTPUT*, the maximum trimming reference is defined by parameter *2002* if parameter *9904* value is *VECTOR: SPEED* or *VECTOR: TORQ* and by parameter *2008* value if parameter *9904* value is *SCALAR: FREQ*.

Settings

Parameter	Additional information
1102	REF1/2 selection
4230 …*4232*	Trimming function settings
4201 …*4229*	PID control settings
Group *20 LIMITS*	Drive operation limits

Example

The drive runs a conveyor line. It is speed controlled but the line tension also needs to be taken into account: If the measured tension exceeds the tension setpoint, the speed will be slightly decreased, and vice versa.

To accomplish the desired speed correction, the user

- activates the trimming function and connects the tension setpoint and the measured tension to it.
- tunes the trimming to a suitable level.

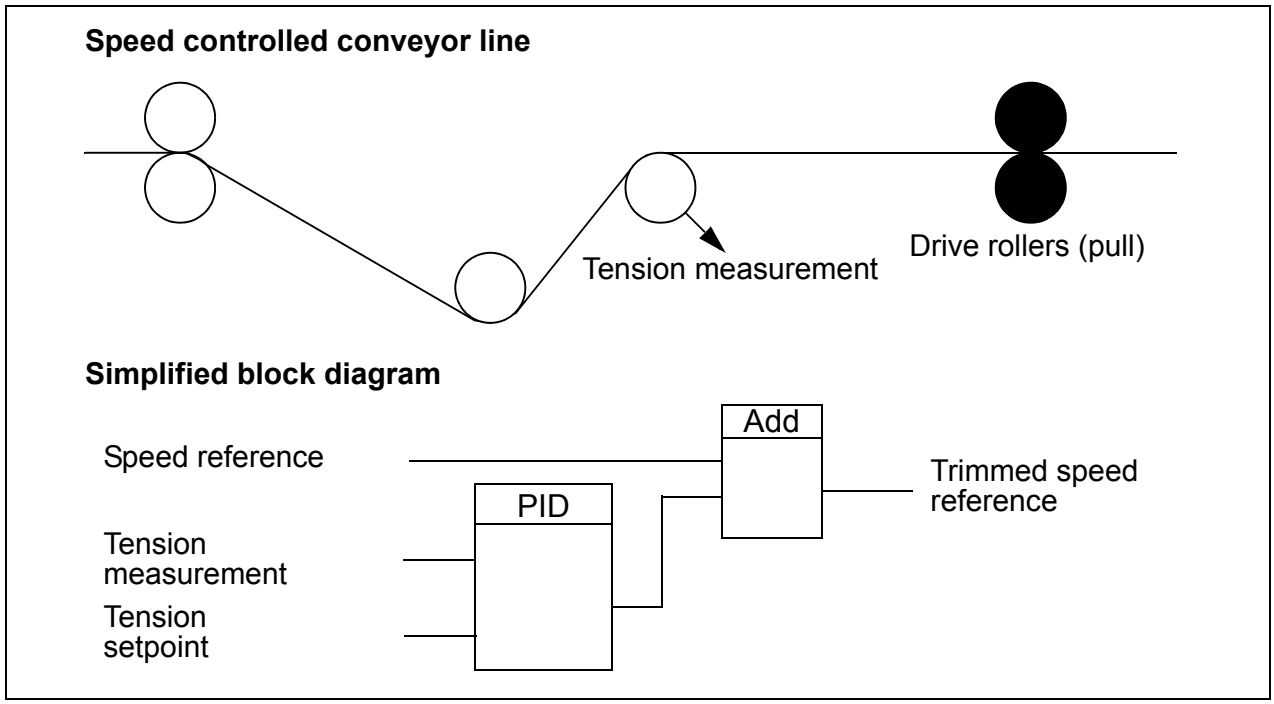

Programmable analog inputs

The drive has two programmable analog voltage/current inputs. The inputs can be inverted, filtered and the maximum and minimum values can be adjusted. The update cycle for the analog input is 8 ms (12 ms cycle once per second). The cycle time is shorter when information is transferred to the application program (8 ms -> 2 ms).

Settings

Parameter	Additional information
Group *11 REFERENCE SELECT*	AI as reference source
Group *13 ANALOG INPUTS*	Analog input processing
3001, *3021*, *3022*, *3107*	AI loss supervision
Group *35 MOTOR TEMP MEAS*	AI in motor temperature measurement
Groups *40 PROCESS PID SET 1* …*42 EXT / TRIM PID*	AI as PID process control reference or actual value source

Parameter	Additional information
8420, *8425*, *8426* *8430*, *8435*, *8436* … *8490*, *8495*, *8496*	AI as Sequence programming reference or trigger signal

Diagnostics

Actual signal	Additional information
0120, *0121*	Analog input values
1401	AI1/A2 signal loss through RO 1
1402/*1403*/*1410*	AI1/A2 signal loss through RO 2…4. With option MREL-01 only.
Alarm	
AI1 LOSS / *AI2 LOSS*	AI1/AI2 signal below limit *3021 AI1 FAULT LIMIT* / *3022 AI2 FAULT LIMIT*
Fault	
AI1 LOSS / *AI2 LOSS*	AI1/AI2 signal below limit *3021 AI1 FAULT LIMIT* / *3022 AI2 FAULT LIMIT*
PAR AI SCALE	Incorrect AI signal scaling (*1302* < *1301* or *1305* < *1304*)

Programmable analog output

One programmable current output (0…20 mA) is available. Analog output signal can be inverted, filtered and the maximum and minimum values can be adjusted. The analog output signals can be proportional to motor speed, output frequency, output current, motor torque, motor power, etc. The update cycle for the analog output is 2 ms.

Analog output can be controlled with Sequence programming. It is also possible to write a value to an analog output through a serial communication link.

Settings

Parameter	Additional information
Group *15 ANALOG OUTPUTS*	AO value selection and processing
Group *35 MOTOR TEMP MEAS*	AO in motor temperature measurement
8423/*8433*/…/*8493*	AO control with Sequence programming

Diagnostics

Actual signal	Additional information
0124	AO value
0170	AO control values defined by Sequence programming
Fault	

Actual signal	Additional information
PAR AO SCALE	Incorrect AO signal scaling (*1503* < *1502*)

Programmable digital inputs

The drive has five programmable digital inputs. The update time for the digital inputs is 2 ms.

One digital input (DI5) can be programmed as a frequency input. See section *Frequency input* on page *133*.

Settings

Parameter	Additional information
Group *10 START/STOP/DIR*	DI as start, stop, direction
Group *11 REFERENCE SELECT*	DI in reference selection, or reference source
Group *12 CONSTANT SPEEDS*	DI in constant speed selection
Group *16 SYSTEM CONTROLS*	DI as external Run enable, fault reset or user macro change signal
Group *19 TIMER & COUNTER*	DI as timer or counter control signal source
2013, *2014*	DI as torque limit source
2109	DI as external emergency stop command source
2201	DI as acceleration and deceleration ramp selection signal
2209	DI as zero ramp force signal
3003	DI as external fault source
Group *35 MOTOR TEMP MEAS*	DI in motor temperature measurement
3601	DI as timed function enable signal source
3622	DI as booster activation signal source
4010/*4110*/*4210*	DI as PID controller reference signal source
4022/*4122*	DI as sleep function activation signal in PID1
4027	DI as PID1 parameter set 1/2 selection signal source
4228	DI as external PID2 function activation signal source
Group *84 SEQUENCE PROG*	DI as Sequence programming control signal source

Diagnostics

Actual signal	Additional information
0160	DI status
0414	DI status at the time the latest fault occurred

Programmable relay output

The drive has one programmable relay output. It is possible to add three additional relay outputs with the optional MREL-01 relay output extension module. For more information, see *MREL-01 relay output extension module user's manual* (3AUA0000035974 [English]).

With a parameter setting it is possible to choose what information to indicate through the relay output: Ready, running, fault, alarm, etc. The update time for the relay output is 2 ms.

A value can be written to a relay output through a serial communication link.

Settings

Parameter	Additional information
Group *14 RELAY OUTPUTS*	RO value selections and operation times
8423	RO control with Sequence programming

Diagnostics

Actual signal	Additional information
0134	RO Control word through fieldbus control
0162	RO 1 status
0173	RO 2…4 status. With option MREL-01 only.

Frequency input

Digital input DI5 can be programmed as a frequency input. Frequency input (0…16000 Hz) can be used as the external reference signal source. The update time for the frequency input is 50 ms. Update time is shorter when information is transferred to the application program (50 ms -> 2 ms).

Settings

Parameter	Additional information
Group *18 FREQ IN & TRAN OUT*	Frequency input minimum and maximum values and filtering
1103/*1106*	External reference REF1/2 through frequency input
4010, *4110*, *4210*	Frequency input as PID reference source

Diagnostics

Actual signal	Additional information
0161	Frequency input value

Transistor output

The drive has one programmable transistor output. The output can be used either as a digital output or frequency output (0…16000 Hz). The update time for the transistor/frequency output is 2 ms.

Settings

Parameter	Additional information
Group *18 FREQ IN & TRAN OUT*	Transistor output settings
8423	Transistor output control with Sequence programming

Diagnostics

Actual signal	Additional information
0163	Transistor output status
0164	Transistor output frequency

Actual signals

Several actual signals are available:

- Drive output frequency, current, voltage and power
- Motor speed and torque
- Intermediate circuit DC voltage
- Active control location (LOCAL, EXT1 or EXT2)
- Reference values
- Drive temperature
- Operating time counter (h), kWh counter
- Digital I/O and analog I/O status
- PID controller actual values.

Three signals can be shown simultaneously on the assistant control panel display (one signal on the basic control panel display). It is also possible to read the values through the serial communication link or through the analog outputs.

Settings

Parameter	Additional information
1501	Selection of an actual signal to AO
1808	Selection of an actual signal to frequency output
Group *32 SUPERVISION*	Actual signal supervision
Group *34 PANEL DISPLAY*	Selection of an actual signals to be displayed on the control panel

Diagnostics

Actual signal	Additional information
Groups *01 OPERATING DATA* … *04 FAULT HISTORY*	Lists of actual signals

Motor identification

The performance of vector control is based on an accurate motor model determined during the motor start-up.

A motor Identification magnetization is automatically performed the first time the start command is given. During this first start-up, the motor is magnetized at zero speed for several seconds to allow the motor model to be created. This identification method is suitable for most applications.

In demanding applications a separate Identification run (ID run) can be performed.

Settings

Parameter *9910 ID RUN*

Power loss ride-through

If the incoming supply voltage is cut off, the drive will continue to operate by utilizing the kinetic energy of the rotating motor. The drive will be fully operational as long as the motor rotates and generates energy to the drive. The drive can continue the operation after the break if the main contactor remained closed.

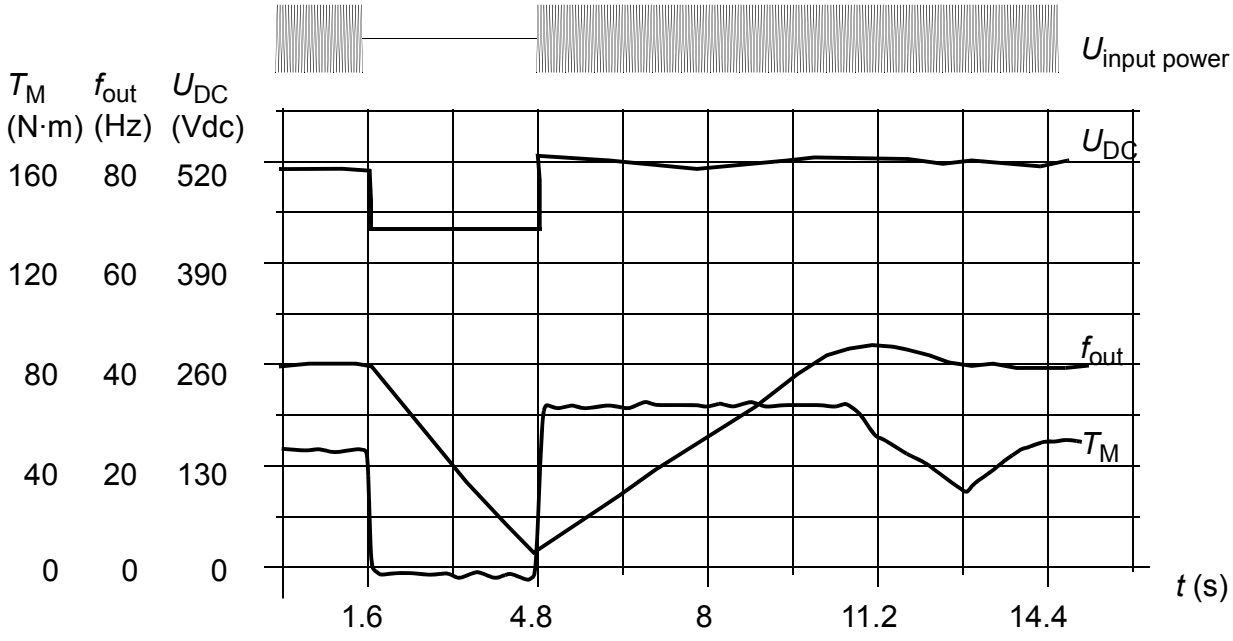

U_{DC} = Intermediate circuit voltage of the drive, f_{out} = Output frequency of the drive, T_M = Motor torque

Loss of supply voltage at nominal load (f_{out} = 40 Hz). The intermediate circuit DC voltage drops to the minimum limit. The controller keeps the voltage steady as long as the input power is switched off. The drive runs the motor in generator mode. The motor speed falls but the drive is operational as long as the motor has enough kinetic energy.

Settings

Parameter *2006 UNDERVOLT CTRL*

DC magnetizing

When DC magnetizing is activated, the drive automatically magnetizes the motor before starting. This feature guarantees the highest possible break-away torque, up to 180% of the motor nominal torque. By adjusting the premagnetizing time, it is possible to synchronize the motor start and eg a mechanical brake release. The Automatic start feature and DC magnetizing cannot be activated at the same time.

Settings

Parameters *2101 START FUNCTION* and *2103 DC MAGN TIME*

Maintenance trigger

A maintenance trigger can be activated to show a notice on the panel display when eg drive power consumption has exceeded the defined trigger point.

Settings

Parameter group *29 MAINTENANCE TRIG*

DC hold

With the motor DC hold feature, it is possible to lock the rotor at zero speed. When both the reference and the motor speed fall below the preset DC hold speed, the drive stops the motor and starts to inject DC into the motor. When the reference speed again exceeds the DC hold speed, the normal drive operation resumes.

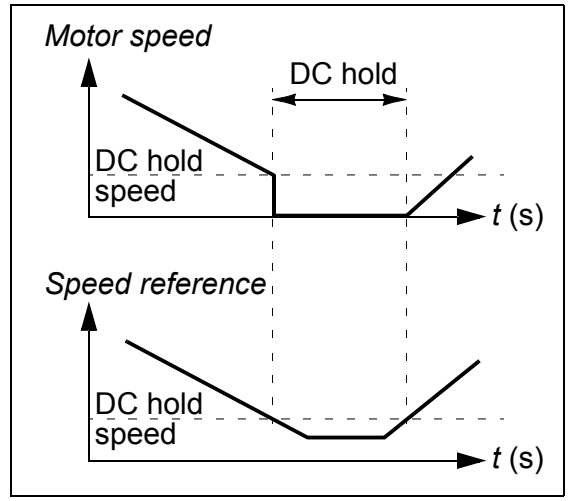

Settings

Parameters *2101*…*2106*

Speed compensated stop

Speed compensation stop is available eg for applications where a conveyer needs to travel a certain distance after receiving the stop command. At maximum speed, the motor is stopped normally along the defined deceleration ramp. Below maximum speed, stop is delayed by running the drive at current speed before the motor is ramped to a stop. As shown in the figure, the distance travelled after the stop command is the same in both cases, ie area A equals area B.

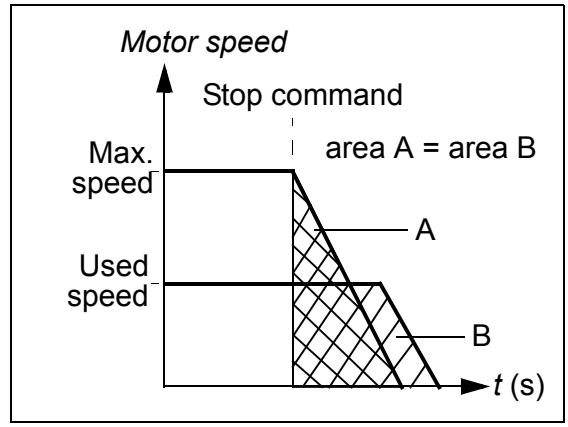

Speed compensation can be restricted to forward or reverse rotating direction.

Settings

Parameter *2102 STOP FUNCTION*

Flux braking

The drive can provide greater deceleration by raising the level of magnetization in the motor. By increasing the motor flux, the energy generated by the motor during braking can be converted to motor thermal energy.

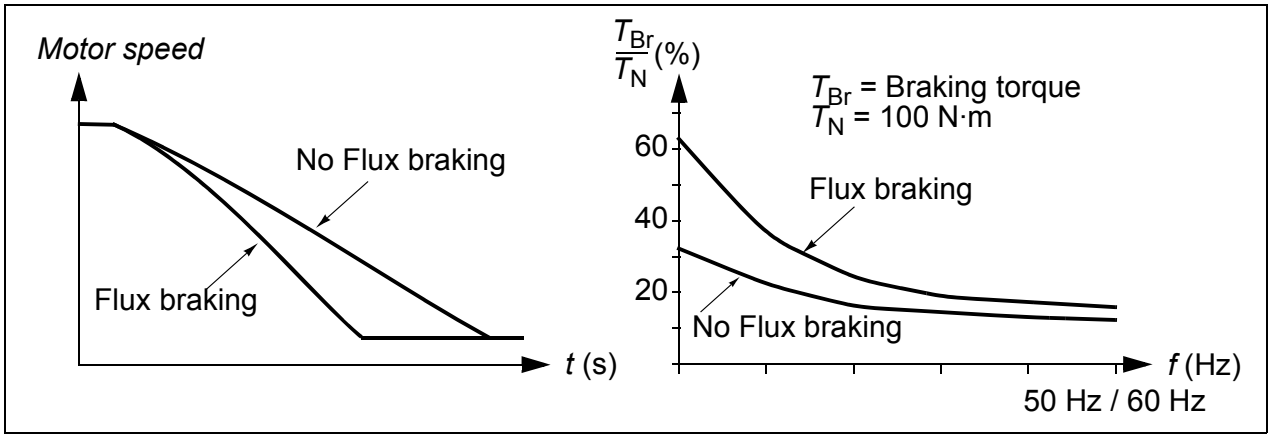

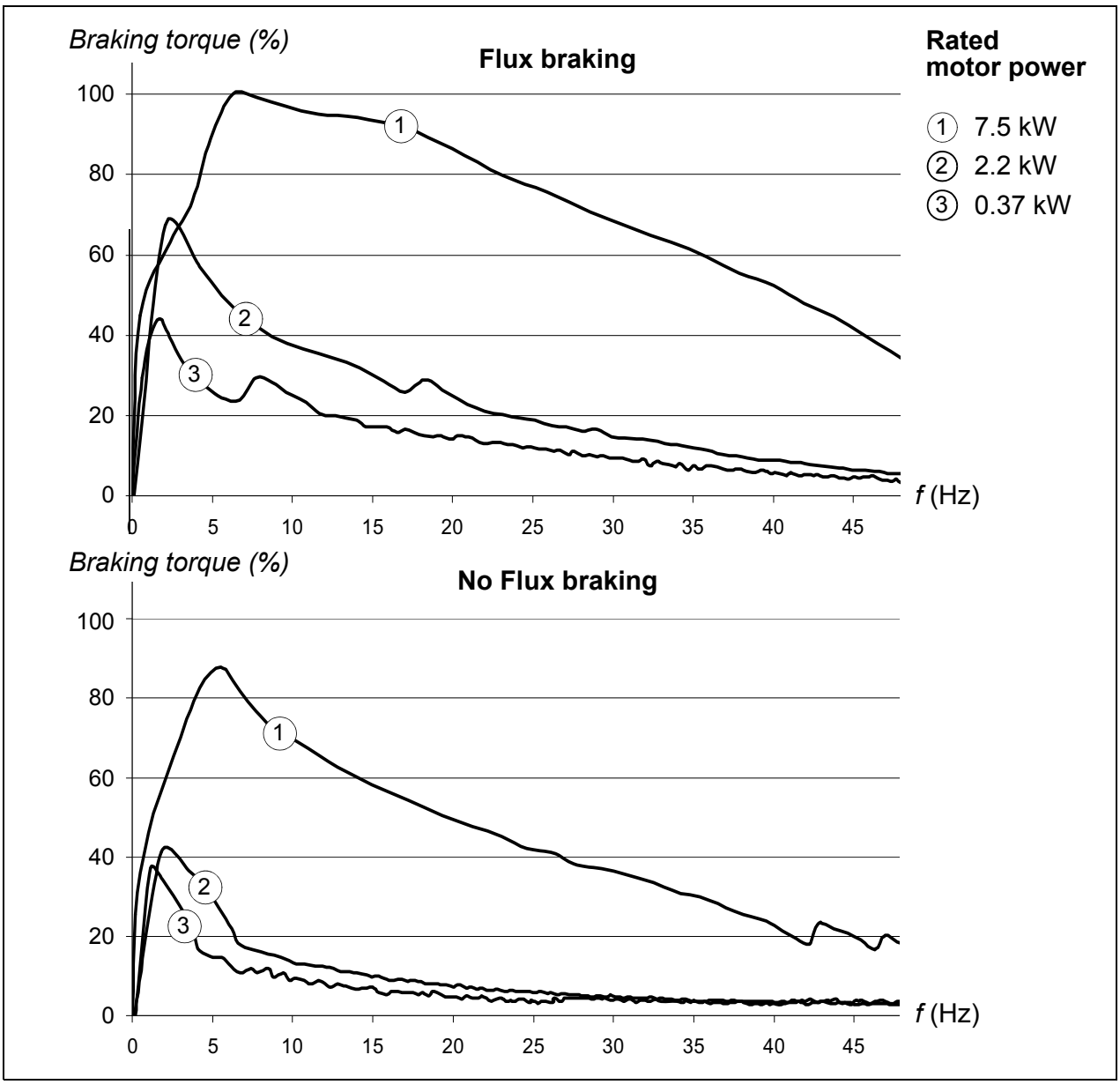

The drive monitors the motor status continuously, also during the Flux braking. Therefore, Flux braking can be used both for stopping the motor and for changing the speed. The other benefits of Flux braking are:

- The braking starts immediately after a stop command is given. The function does not need to wait for the flux reduction before it can start the braking.
- The cooling of the motor is efficient. The stator current of the motor increases during the Flux braking, not the rotor current. The stator cools much more efficiently than the rotor.

Settings

Parameter *2602 FLUX BRAKING*

Flux optimization

Flux optimization reduces the total energy consumption and motor noise level when the drive operates below the nominal load. The total efficiency (motor and the drive) can be improved by 1% to 10%, depending on the load torque and speed.

Settings

Parameter *2601 FLUX OPT ENABLE*

Acceleration and deceleration ramps

Two user-selectable acceleration and deceleration ramps are available. It is possible to adjust the acceleration/deceleration times and the ramp shape. Switching between the two ramps can be controlled through a digital input or fieldbus.

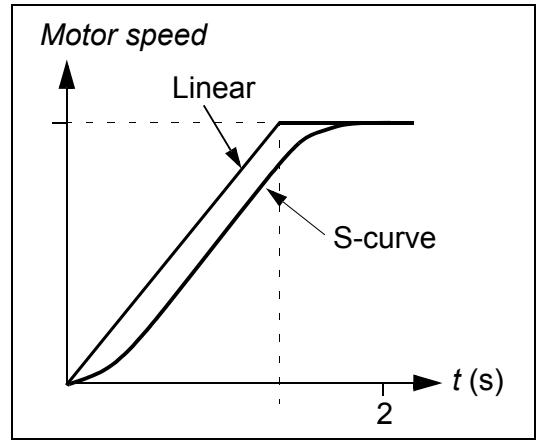

The available ramp shape alternatives are Linear and S-curve.

Linear shape is suitable for drives requiring steady or slow acceleration/deceleration.

S-curve shape is ideal for conveyors carrying fragile loads, or other applications where a smooth transition is required when changing the speed.

Settings

Parameter group *22 ACCEL/DECEL*

Sequence programming offers eight additional ramp times. See section *Sequence programming* on page *166*.

Critical speeds

Critical speeds function is available for applications where it is necessary to avoid certain motor speeds or speed bands because of eg mechanical resonance problems. The user can define three critical speeds or speed bands.

Settings

Parameter group *25 CRITICAL SPEEDS*

Constant speeds

It is possible to define seven positive constant speeds. Constant speeds are selected with digital inputs. Constant speed activation overrides the external speed reference.

Constant speed selections are ignored if

- torque control is active, or
- PID reference is being followed, or
- drive is in local control mode.

This function operates on a 2 ms time level.

Settings

Parameter	Additional information
Group *12 CONSTANT SPEEDS*	Constant speed settings
1207	Constant speed 6. Used also for jogging function. See section *Jogging* on page *161*.
1208	Constant speed 7. Used also for fault functions (see group *30 FAULT FUNCTIONS*) and for jogging function (see section *Jogging* on page *161*).

Custom U/f ratio

The user can define a U/f curve (output voltage as a function of frequency). This custom ratio is used only in special applications where linear and squared U/f ratio are not sufficient (eg when motor break-away torque needs to be boosted).

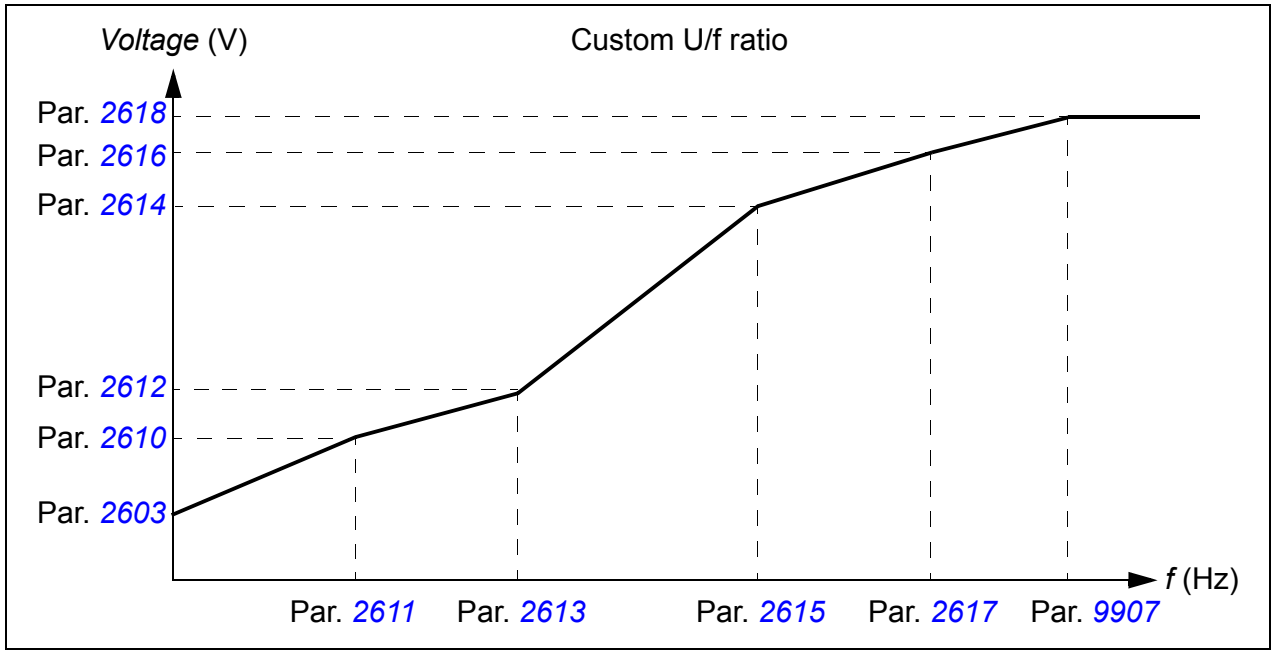

Note: The U/f curve can be used in scalar control only, ie when *9904 MOTOR CTRL MODE* setting is *SCALAR: FREQ*.

Note: The voltage and the frequency points of the U/f curve must fulfill the following requirements:

2610 < *2612* < *2614* < *2616* < *2618* and
2611 < *2613* < *2615* < *2617* < *9907*

WARNING! High voltage at low frequencies may result in poor performance or motor damage (overheating).

Settings

Parameter	Additional information
2605	Custom U/f ratio activation
2610…*2618*	Custom U/f ratio settings

Diagnostics

Fault	Additional information
PAR CUSTOM U/F	Incorrect U/f ratio

Speed controller tuning

It is possible to manually adjust the controller gain, integration time and derivation time, or let the drive perform a separate speed controller Autotune run (parameter *2305 AUTOTUNE RUN*). In Autotune run, the speed controller is tuned based on the load and inertia of the motor and the machine. The figure below shows speed responses at a speed reference step (typically, 1 to 20%).

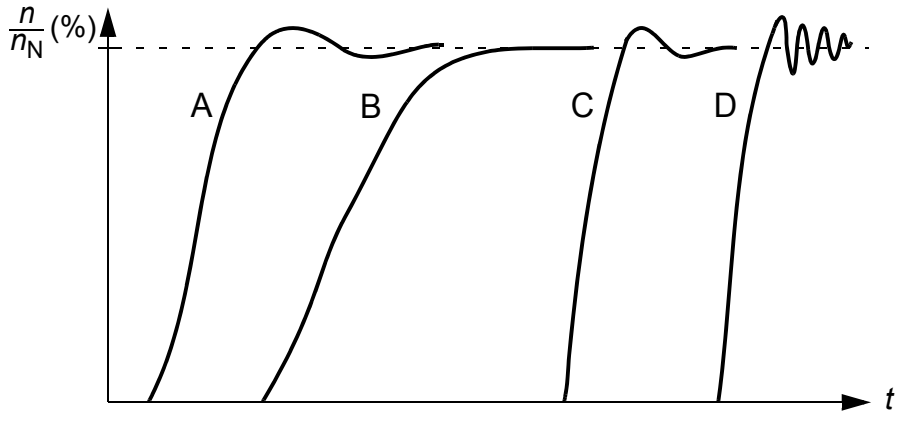

A: Undercompensated
B: Normally tuned (autotuning)
C: Normally tuned (manually). Better dynamic performance than with B

The figure below is a simplified block diagram of the speed controller. The controller output is the reference for the torque controller.

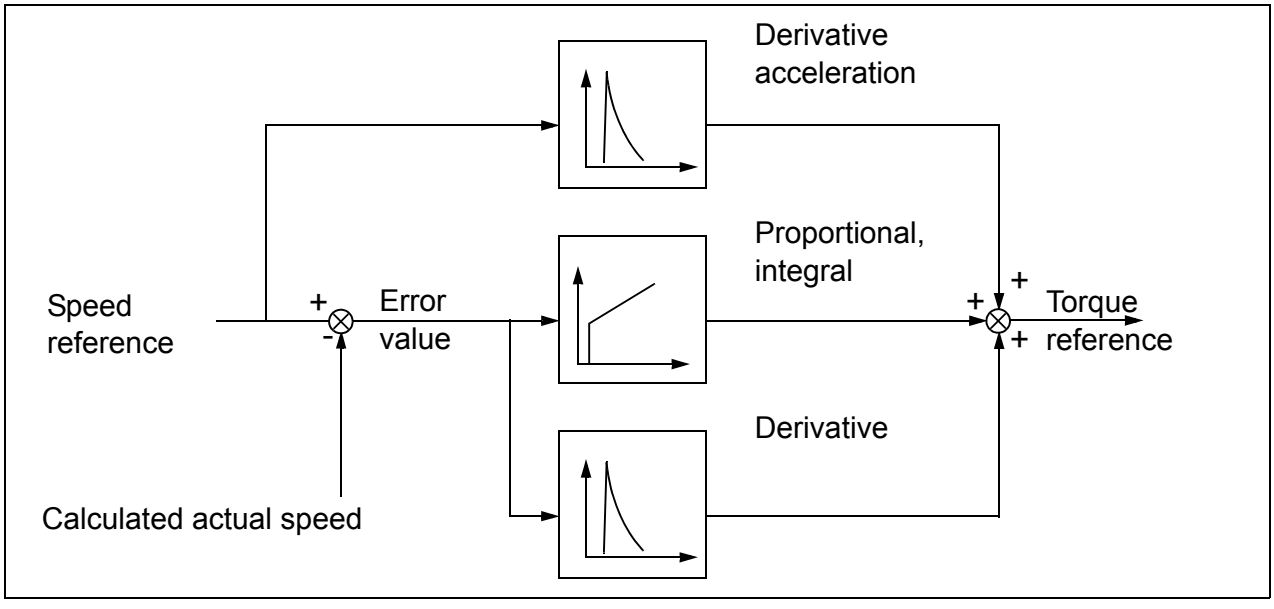

Note: The speed controller can be used in vector control, ie when *9904 MOTOR CTRL MODE* setting is *VECTOR: SPEED* or *VECTOR: TORQ*.

Settings

Parameter groups *23 SPEED CONTROL* and *20 LIMITS*

Diagnostics

Actual signal *0102 SPEED*

Speed control performance figures

The table below shows typical performance figures for speed control.

Speed control	No pulse encoder	With pulse encoder
Static accuracy	20% of motor nominal slip	2% of motor nominal slip
Dynamic accuracy	< 1% s with 100% torque step	< 1% s with 100% torque step

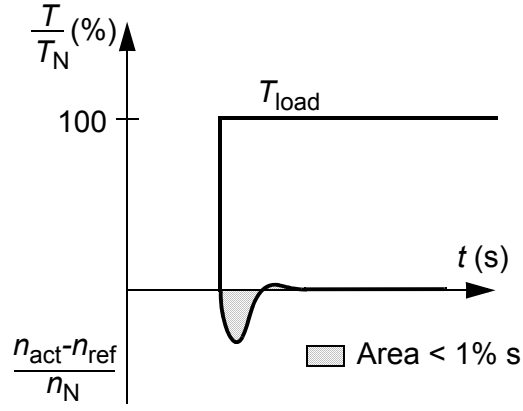

T_N = rated motor torque
n_N = rated motor speed
n_{act} = actual speed

Torque control performance figures

The drive can perform precise torque control without any speed feedback from the motor shaft. The table below shows typical performance figures for torque control.

Torque control	No pulse encoder	With pulse encoder
Non-linearity	± 5% with nominal torque (± 20% at the most demanding operating point)	± 5% with nominal torque
Torque step rise time	< 10 ms with nominal torque	< 10 ms with nominal torque

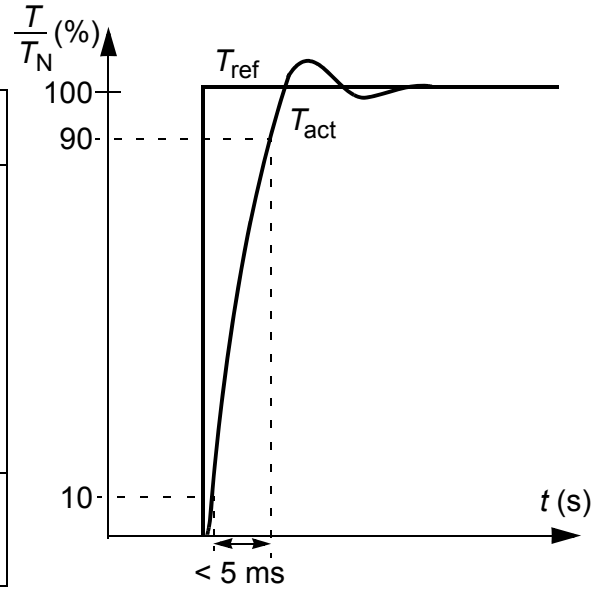

T_N = rated motor torque
T_{ref} = torque reference

Scalar control

It is possible to select scalar control as the motor control method instead of vector control. In the scalar control mode, the drive is controlled with a frequency reference.

It is recommended to activate the scalar control mode in the following special applications:

- In multimotor drives: 1) if the load is not equally shared between the motors, 2) if the motors are of different sizes, or 3) if the motors are going to be changed after the motor identification.
- If the nominal current of the motor is less than 20% of the nominal output current of the drive.
- When the drive is used for test purposes with no motor connected.

The scalar control mode is not recommended for permanent magnet motors.

In the scalar control mode, some standard features are not available.

Settings

Parameter *9904 MOTOR CTRL MODE*

IR compensation for a scalar controlled drive

IR compensation is active only when the motor control mode is scalar (see section *Scalar control* on page *144*). When IR compensation is activated, the drive gives an extra voltage boost to the motor at low speeds. IR compensation is useful in applications that require high break-away torque. In vector control, no IR compensation is possible/needed.

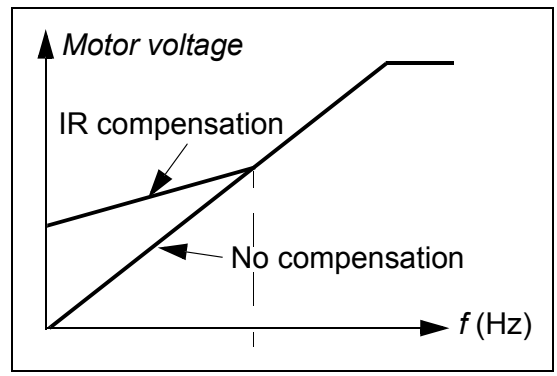

Settings

Parameter *2603 IR COMP VOLT*

Programmable protection functions

AI<Min

AI<Min function defines the drive operation if an analog input signal falls below the set minimum limit.

Settings

Parameters *3001 AI<MIN FUNCTION*, *3021 AI1 FAULT LIMIT* and *3022 AI2 FAULT LIMIT*

Panel loss

Panel loss function defines the operation of the drive if the control panel selected as the control location for the drive stops communicating.

Settings

Parameter *3002 PANEL COMM ERR*

External fault

External faults (1 and 2) can be supervised by defining one digital input as a source for an external fault indication signal.

Settings

Parameters *3003 EXTERNAL FAULT 1* and *3004 EXTERNAL FAULT 2*

Stall protection

The drive protects the motor in a stall situation. It is possible to adjust the supervision limits (frequency, time) and choose how the drive reacts to the motor stall condition (alarm indication / fault indication & drive stop / no reaction).

Settings

Parameters *3010 STALL FUNCTION*, *3011 STALL FREQUENCY* and *3012 STALL TIME*

Motor thermal protection

The motor can be protected against overheating by activating the Motor thermal protection function.

The drive calculates the temperature of the motor on the basis of the following assumptions:

- The motor is in the ambient temperature of 30 °C when power is applied to the drive.
- Motor temperature is calculated using either the user-adjustable or automatically calculated motor thermal time constant and motor load curve (see the figures below). The load curve should be adjusted if the ambient temperature exceeds 30 °C

.

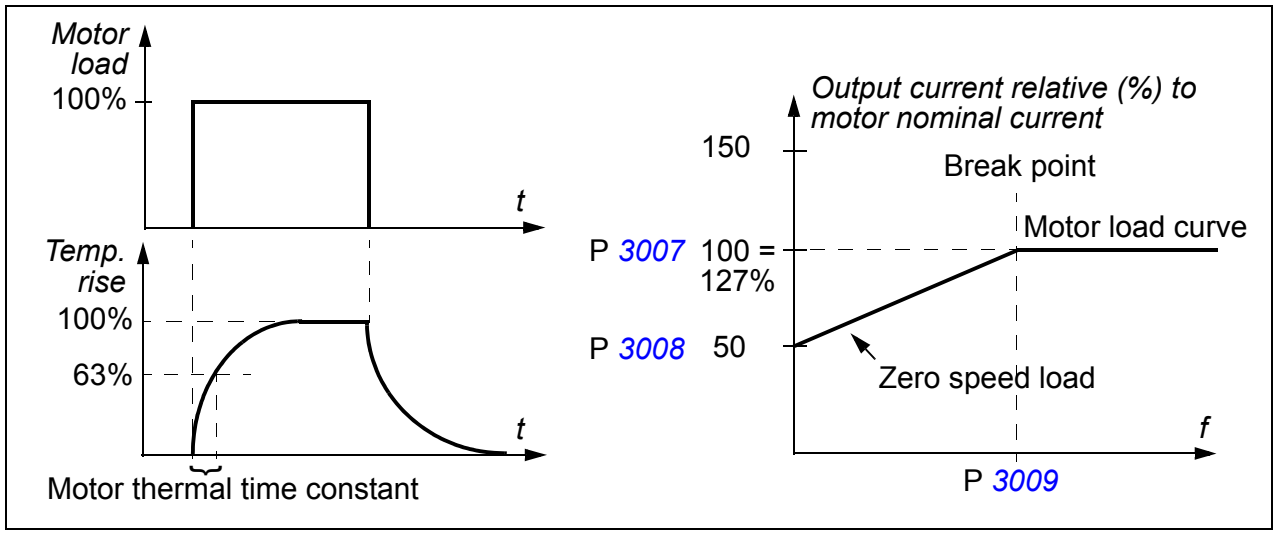

Settings

Parameters *3005*…*3009*

Note: It is also possible to use the motor temperature measurement function. See section *Motor temperature measurement through the standard I/O* on page *155*.

Underload protection

Loss of motor load may indicate a process malfunction. The drive provides an underload function to protect the machinery and process in such a serious fault condition. Supervision limits - underload curve and underload time - can be specified as well as the action taken by the drive upon the underload condition (alarm indication / fault indication & drive stop / no reaction).

Settings

Parameters *3013*…*3015*

Earth fault protection

The Earth fault protection detects earth faults in the motor or motor cable. The protection can be selected to be active during start and run or during start only.

An earth fault in the input power line does not activate the protection.

Settings

Parameter *3017 EARTH FAULT*

Incorrect wiring

Defines the operation when incorrect input power cable connection is detected.

Settings

Parameter *3023 WIRING FAULT*

Input phase loss

Input phase loss protection circuits supervise the input power cable connection status by detecting intermediate circuit ripple. If a phase is lost, the ripple increases.

Settings

Parameter *3016 SUPPLY PHASE*

Pre-programmed faults

Overcurrent

The overcurrent trip limit for the drive is 325% of the drive nominal current.

DC overvoltage

The DC overvoltage trip limit is 420 V (for 200 V drives) and 840 V (for 400 V drives).

DC undervoltage

The DC undervoltage trip limit is adaptive. See parameter *2006 UNDERVOLT CTRL*.

Drive temperature

The drive supervises the IGBT temperature. There are two supervision limits: Alarm limit and fault trip limit.

Short circuit

If a short circuit occurs, the drive will not start and a fault indication is given.

Internal fault

If the drive detects an internal fault, the drive is stopped and a fault indication is given.

Operation limits

The drive has adjustable limits for speed, current (maximum), torque (maximum) and DC voltage.

Settings

Parameter group *20 LIMITS*

Power limit

Power limitation is used to protect the input bridge and the DC intermediate circuit. If the maximum allowed power is exceeded, the drive torque is automatically limited. Maximum overload and continuous power limits depend on the drive hardware. For specific values, see chapter *Technical data* on page *357*.

Automatic resets

The drive can automatically reset itself after overcurrent, overvoltage, undervoltage, external and “analog input below a minimum” faults. The Automatic resets must be activated by the user.

Settings

Parameter	Additional information
Group *31 AUTOMATIC RESET*	Automatic reset settings

Diagnostics

Alarm	Additional information
AUTORESET	Automatic reset alarm

Supervisions

The drive monitors whether certain user selectable variables are within the user-defined limits. The user may set limits for speed, current etc. The supervision status can be indicated through relay or digital output.

The supervision functions operate on a 2 ms time level.

Settings

Parameter group *32 SUPERVISION*

Diagnostics

Actual signal	Additional information
1401	Supervision status through RO 1
1402/*1403*/*1410*	Supervision status through RO 2…4. With option MREL-01 only.
1805	Supervision status through DO
8425, *8426* / *8435*, *8436* /…/*8495*, *8496*	Sequence programming state change according to supervision functions

Parameter lock

The user can prevent parameter adjustment by activating the parameter lock.

Settings

Parameters *1602 PARAMETER LOCK* and *1603 PASS CODE*

PID control

There are two built-in PID controllers in the drive:

- Process PID (PID1) and
- External/Trim PID (PID2).

The PID controller can be used when the motor speed needs to be controlled based on process variables such as pressure, flow or temperature.

When the PID control is activated, a process reference (setpoint) is connected to the drive instead of a speed reference. An actual value (process feedback) is also brought back to the drive. The drive compares the reference and the actual values, and automatically adjusts the drive speed in order to keep the measured process quantity (actual value) at the desired level (reference).

The control operates on a 2 ms time level.

Process controller PID1

PID1 has two separate sets of parameters (*40 PROCESS PID SET 1*, *41 PROCESS PID SET 2*). Selection between parameter sets 1 and 2 is defined by a parameter.

In most cases when there is only one transducer signal wired to the drive, only parameter set 1 is needed. Two different parameter sets (1 and 2) are used eg when the load of the motor changes considerably in time.

External/Trim controller PID2

PID2 (*42 EXT / TRIM PID*) can be used in two different ways:

- External controller: Instead of using additional PID controller hardware, the user can connect PID2 output through drive analog output or fieldbus controller to control a field instrument like a damper or a valve.
- Trim controller: PID2 can be used to trim or fine tune the reference of the drive. See section *Reference trimming* on page *129*.

Block diagrams

The figure below shows an application example: The controller adjusts the speed of a pressure boost pump according to the measured pressure and the set pressure reference.

Example:
Pressure boost pump

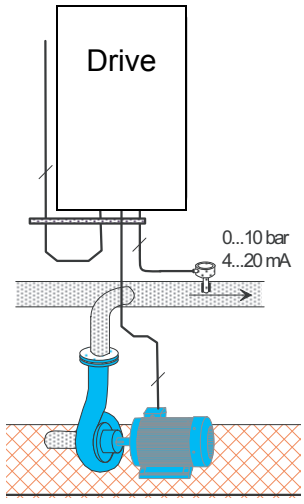

PID control block diagram

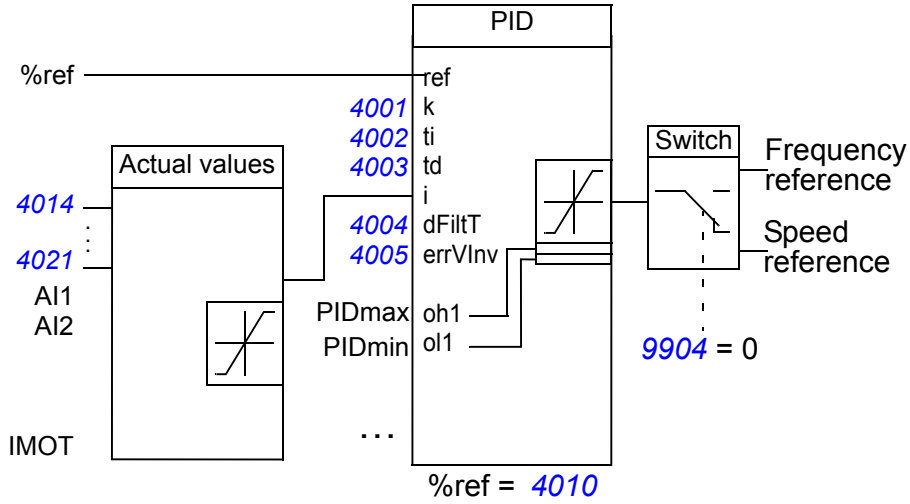

The following figure presents the speed/scalar control block diagram for process controller PID1.

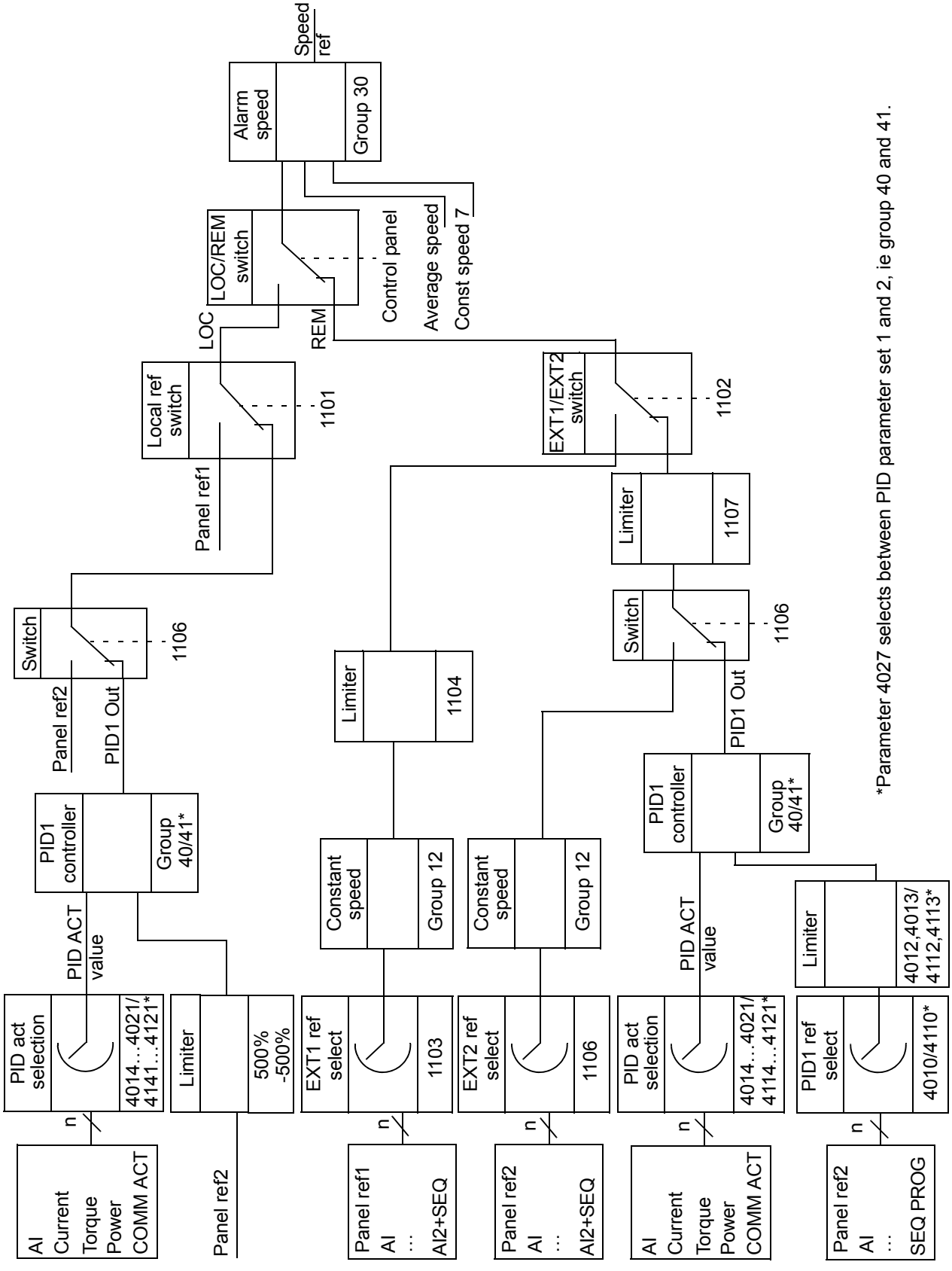

Settings

Parameter	Additional information
1101	Local control mode reference type selection
1102	*EXT1*/*EXT2* selection
1106	PID1 activation
1107	REF2 minimum limit
1501	PID2 output (external controller) connection to AO
9902	PID control macro selection
Groups *40 PROCESS PID SET 1*…*41 PROCESS PID SET 2*	PID1 settings
Group *42 EXT / TRIM PID*	PID2 settings

Diagnostics

Actual signal	Additional information
0126/*0127*	PID 1/2 output value
0128/*0129*	PID 1/2 setpoint value
0130/*0131*	PID 1/2 feedback value
0132/*0133*	PID 1/2 deviation
0170	AO value defined by Sequence programming

Sleep function for the process PID (PID1) control

The sleep function operates on a 2 ms time level.

The block diagram below illustrates the sleep function enable/disable logic. The sleep function can be put into use only when the PID control is active.

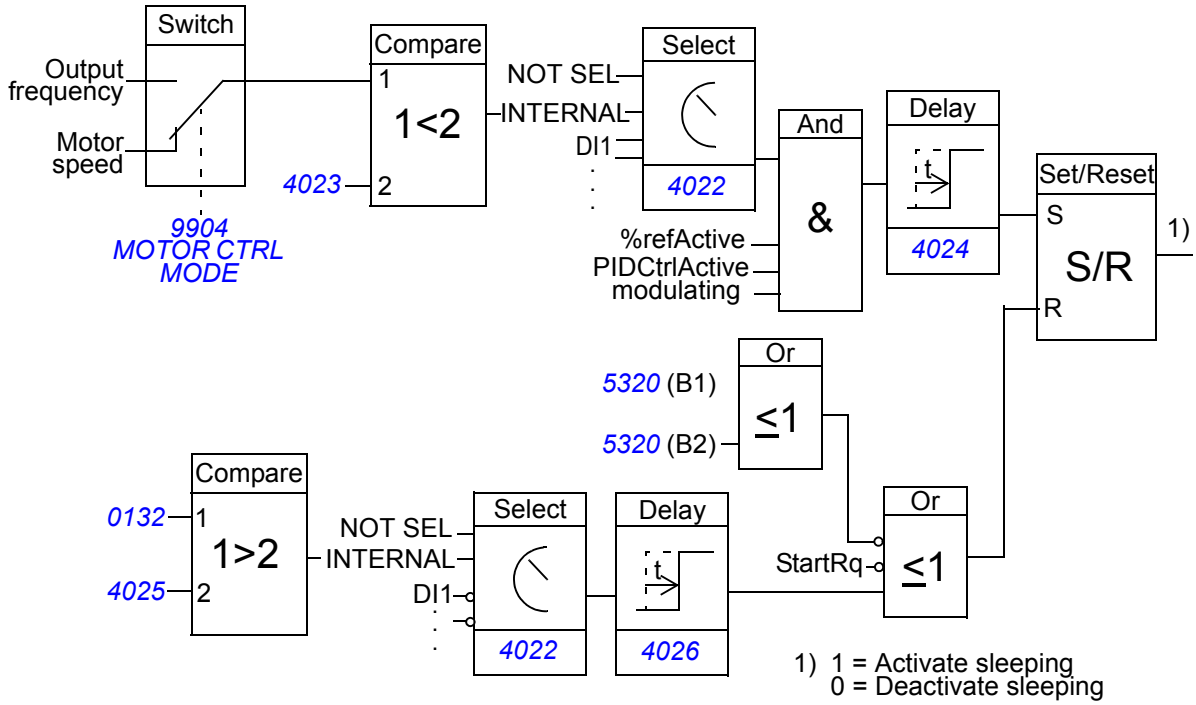

Motor speed: Actual speed of the motor
%refActive: The % reference (EXT REF2) is in use. See parameter *1102 EXT1/EXT2 SEL*.
PIDCtrlActive: Parameter *9902 APPLIC MACRO* = *PID CONTROL*.
modulating: Drive IGBT control is operating.

Example

The time scheme below visualizes the operation of the sleep function.

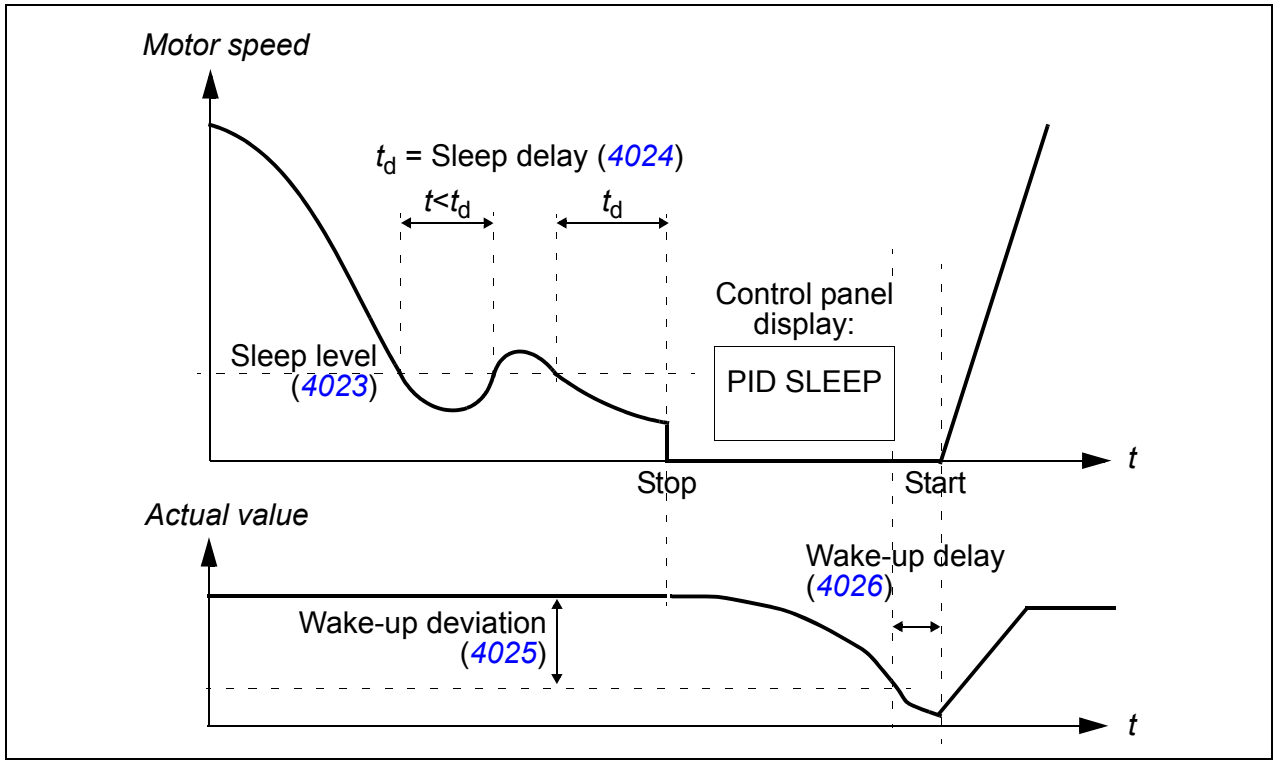

Sleep function for a PID controlled pressure boost pump (when parameter *4022 SLEEP SELECTION* is set to *INTERNAL*): The water consumption falls at night. As a consequence, the PID process controller decreases the motor speed. However, due to natural losses in the pipes and the low efficiency of the centrifugal pump at low speeds, the motor does not stop but keeps rotating. The sleep function detects the slow rotation, and stops the unnecessary pumping after the sleep delay has passed. The drive shifts into sleep mode, still monitoring the pressure. The pumping restarts when the pressure falls under the allowed minimum level and the wake-up delay has passed.

Settings

Parameter	Additional information
9902	PID control activation
4022…*4026*, *4122*…*4126*	Sleep function settings

Diagnostics

Parameter	Additional information
1401	PID sleep function status through RO 1
1402/*1403*/*1410*	PID sleep function status through RO 2…4. With option MREL-01 only.
Alarm	**Additional information**
PID SLEEP	Sleep mode

Motor temperature measurement through the standard I/O

This section describes the temperature measurement of one motor when the drive I/O terminals are used as the connection interface.

Motor temperature can be measured using PT100 or PTC sensors connected to analog input and output.

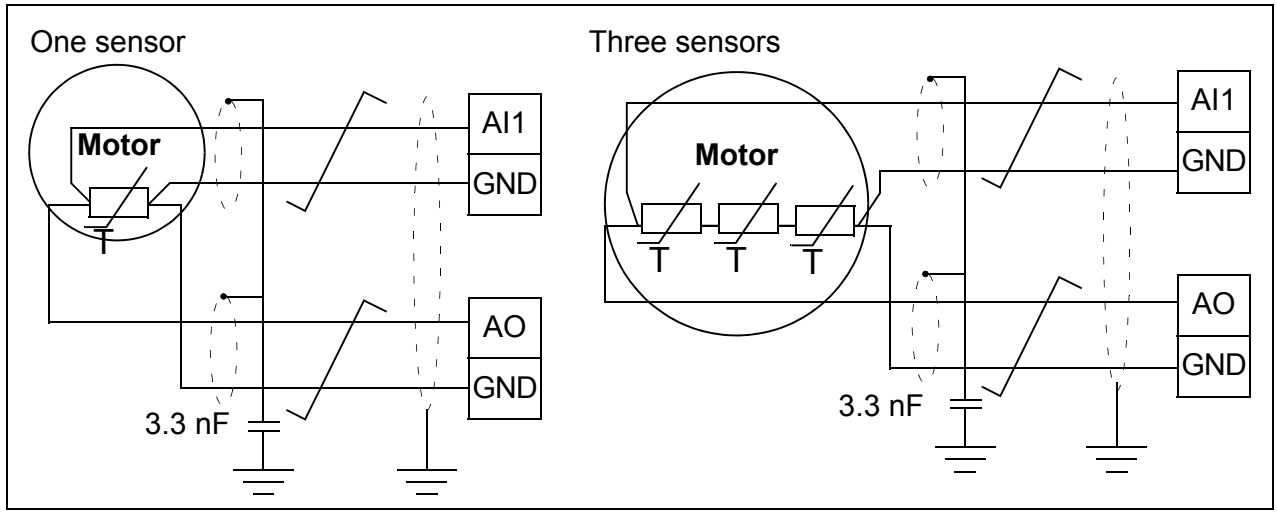

WARNING! According to IEC 664, the connection of the motor temperature sensor requires double or reinforced insulation between motor live parts and the sensor. Reinforced insulation entails a clearance and creepage distance of 8 mm (400/500 V AC equipment).

If the assembly does not fulfill the requirement, the I/O board terminals must be protected against contact and they may not be connected to other equipment, or the temperature sensor must be isolated from the I/O terminals.

It is also possible to monitor motor temperature by connecting a PTC sensor and a thermistor relay between the +24 V DC voltage supply offered by the drive and a digital input. The figure below displays the connection.

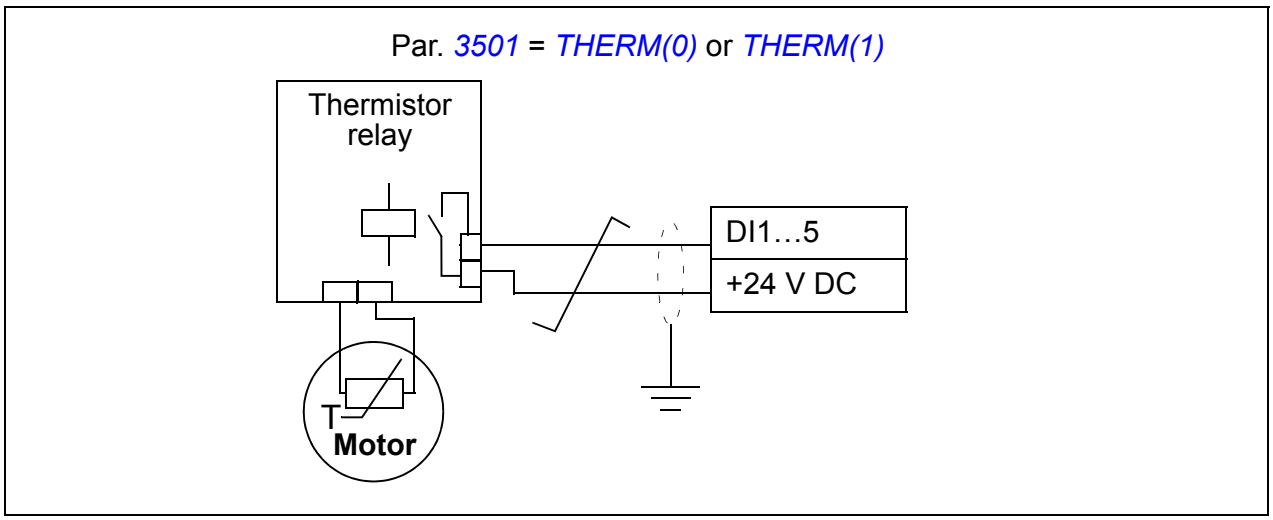

WARNING! According to IEC 664, the connection of the motor thermistor to the digital input requires double or reinforced insulation between motor live parts and the thermistor. Reinforced insulation entails a clearance and creeping distance of 8 mm (400/500 V AC equipment).

If the thermistor assembly does not fulfill the requirement, the other I/O terminals of the drive must be protected against contact, or a thermistor relay must be used to isolate the thermistor from the digital input.

Settings

Parameter	Additional information
Group *13 ANALOG INPUTS*	Analog input settings
Group *15 ANALOG OUTPUTS*	Analog output settings
Group *35 MOTOR TEMP MEAS*	Motor temperature measurement settings
Other	
At the motor end the cable shield should be earthed through, eg a 3.3 nF capacitor. If this is not possible, the shield is to be left unconnected.	

Diagnostics

Actual signal	Additional information
0145	Motor temperature
Alarm/Fault	**Additional information**
MOTOR TEMP/MOT OVERTEMP	Excessive motor temp

Control of a mechanical brake

The mechanical brake is used for holding the motor and driven machinery at zero speed when the drive is stopped, or not powered.

Example

The figure below shows a brake control application example.

WARNING! Make sure that the machinery into which the drive with brake control function is integrated fulfills the personnel safety regulations. Note that the frequency converter (a Complete Drive Module or a Basic Drive Module, as defined in IEC 61800-2), is not considered a safety device mentioned in the European Machinery Directive and related harmonized standards. Thus, the personnel safety of the complete machinery must not be based on a specific frequency converter feature (such as the brake control function), but it has to be implemented as defined in the application specific regulations.

Brake control logic is integrated in the drive application program. The user has to take care of the power supply and wiring.
Brake on/off control is through relay output RO.

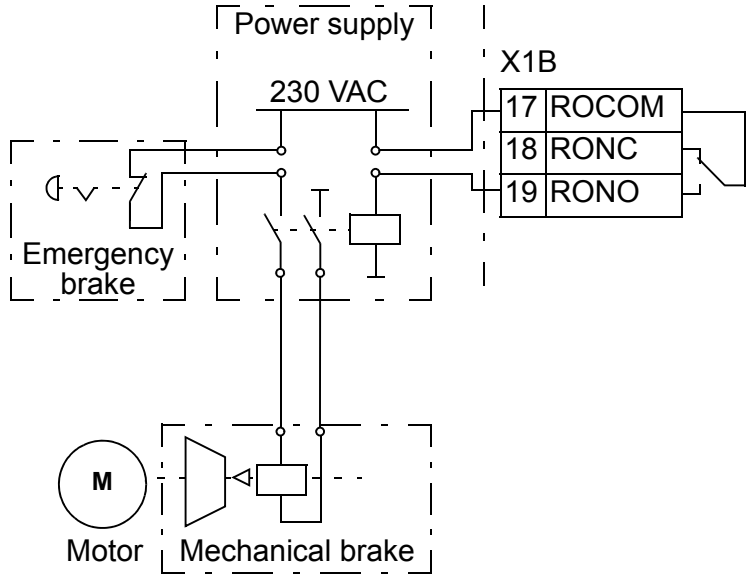

Operation time scheme

The time scheme below illustrates the operation of the brake control function. See also section *State shifts* on page *159*.

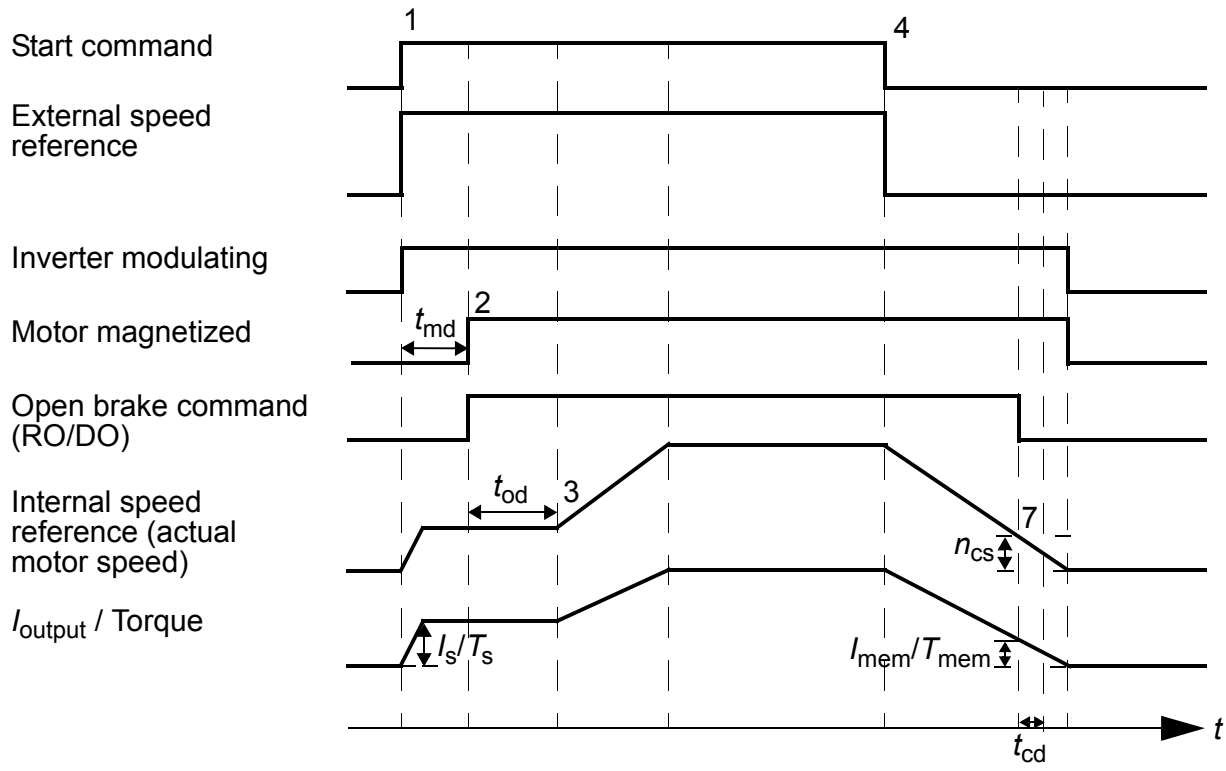

I_s/T_s	Brake open current/torque (parameter *4302 BRAKE OPEN LVL* or current/torque from parameter *0179 BRAKE TORQUE MEM*)
I_{mem}/T_{mem}	Brake close current/torque (saved in parameter *0179 BRAKE TORQUE MEM*)
t_{md}	Motor magnetizing delay (parameter *4305 BRAKE MAGN DELAY*)
t_{od}	Brake open delay (parameter *4301 BRAKE OPEN DLY*)
n_{cs}	Brake close speed (parameter *4303 BRAKE CLOSE LVL*)
t_{cd}	Mechanical brake close delay

State shifts

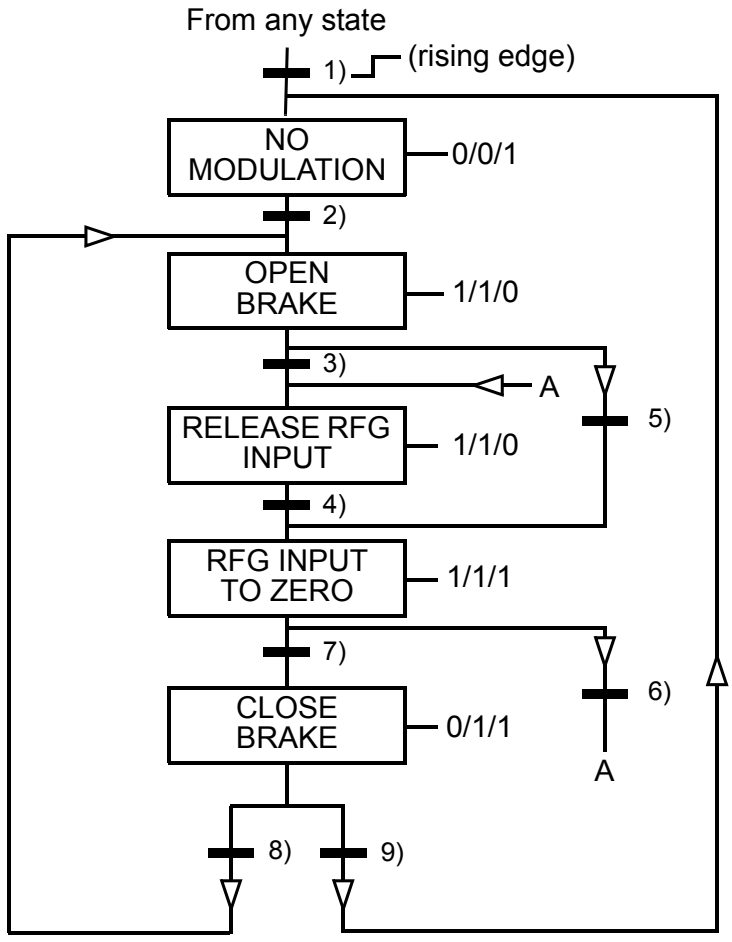

RFG = Ramp function generator in the speed control loop (reference handling).

State (Symbol NN — X/Y/Z)

- NN: State name
- X/Y/Z: State outputs/operations
  - X = 1 Open the brake. The relay output set to brake on/off control energizes.
  - Y = 1 Forced start. The function keeps the internal Start on until the brake is closed in spite of the status of the external Start signal.
  - Z = 1 Ramp in zero. Forces the used speed reference (internal) to zero along a ramp.

State change conditions (Symbol ▬)

1) Brake control active 0 -> 1 OR Inverter is modulating = 0
2) Motor magnetised = 1 AND Drive running = 1
3) Brake is open AND Brake open delay passed AND Start = 1
4) Start = 0
5) Start = 0
6) Start = 1
7) $|$Actual motor speed$|$ < Brake close speed AND Start = 0
8) Start = 1
9) Brake is closed AND Brake close delay passed = 1 AND Start = 0

Settings

Parameter	Additional information
1401/*1805*	Mechanical brake activation through RO 1 / DO
1402/*1403*/*1410*	Mechanical brake activation through RO 2…4. With option MREL-01 only.
2112	Zero speed delay
Group *43 MECH BRK CONTROL*	Brake function settings

Jogging

The jogging function is typically used to control a cyclical movement of a machine section. One push button controls the drive through the whole cycle: When it is on, the drive starts, accelerates to a preset speed at a preset rate. When it is off, the drive decelerates to zero speed at a preset rate.

The figure and table below describe the operation of the drive. They also represent how the drive shifts to normal operation (= jogging inactive) when the drive start command is switched on. Jog cmd = State of the jogging input, Start cmd = State of the drive start command.

The function operates on a 2 ms time level

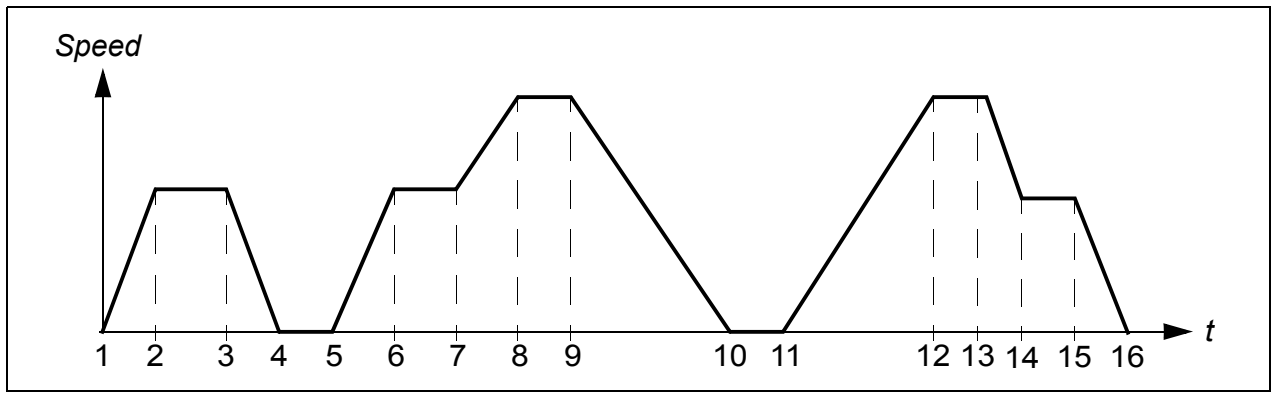

Phase	Jog cmd	Start cmd	Description
1-2	1	0	Drive accelerates to the jogging speed along the acceleration ramp of the jogging function.
2-3	1	0	Drive runs at the jogging speed.
3-4	0	0	Drive decelerates to zero speed along the deceleration ramp of the jogging function.
4-5	0	0	Drive is stopped.
5-6	1	0	Drive accelerates to the jogging speed along the acceleration ramp of the jogging function.
6-7	1	0	Drive runs at the jogging speed.
7-8	x	1	Normal operation overrides the jogging. Drive accelerates to the speed reference along the active acceleration ramp.
8-9	x	1	Normal operation overrides the jogging. Drive follows the speed reference.
9-10	0	0	Drive decelerates to zero speed along the active deceleration ramp.
10-11	0	0	Drive is stopped.
11-12	x	1	Normal operation overrides the jogging. Drive accelerates to the speed reference along the active acceleration ramp.
12-13	x	1	Normal operation overrides the jogging. Drive follows the speed reference.
13-14	1	0	Drive decelerates to the jogging speed along the deceleration ramp of the jogging function.
14-15	1	0	Drive runs at the jogging speed.
15-16	0	0	Drive decelerates to zero speed along the deceleration ramp of the jogging function.

x = state can be either 1 or 0

Note: The jogging is not operational when the drive start command is on.

Note: The jogging speed overrides the constant speeds.

Note: The jogging uses ramp stop even if parameter *2102 STOP FUNCTION* selection is *COAST*.

Note: The ramp shape time is set to zero during the jogging (ie linear ramp).

Jogging function uses constant speed 7 as jogging speed and acceleration/deceleration ramp pair 2.

It is also possible to activate jogging function 1 or 2 through fieldbus. Jogging function 1 uses constant speed 7 and jogging function 2 uses constant speed 6. Both functions use acceleration/deceleration ramp pair 2.

Settings

Parameter	Additional information
1010	Jogging activation
1208	Jogging speed
1208/*1207*	Jogging speed for jogging function 1/2 activated through fieldbus
2112	Zero speed delay
2205, *2206*	Acceleration and deceleration times
2207	Acceleration and deceleration ramp shape time: Set to zero during the jogging (ie linear ramp).

Diagnostics

Actual signal	Additional information
0302	Jogging 1/2 activation through fieldbus
1401	Jogging function status through RO 1
1402/*1403*/*1410*	Jogging function status through RO 2…4. With option MREL-01 only.
1805	Jogging function status through DO

Timed functions

A variety of drive functions can be time controlled, eg start/stop and EXT1/EXT2 control. The drive offers

- four start and stop times (*START TIME 1*…*START TIME 4*, *STOP TIME 1*…*STOP TIME 4*)
- four start and stop days (*START DAY 1*…*START DAY 4*, *STOP DAY 1*…*STOP DAY 4*)
- four timed functions for collecting the selected time periods 1…4 together (*TIMED FUNC 1 SRC*…*TIMED FUNC 4 SRC*)
- booster time (an additional booster time connected to timed functions).

A timed function can be connected to multiple time periods:

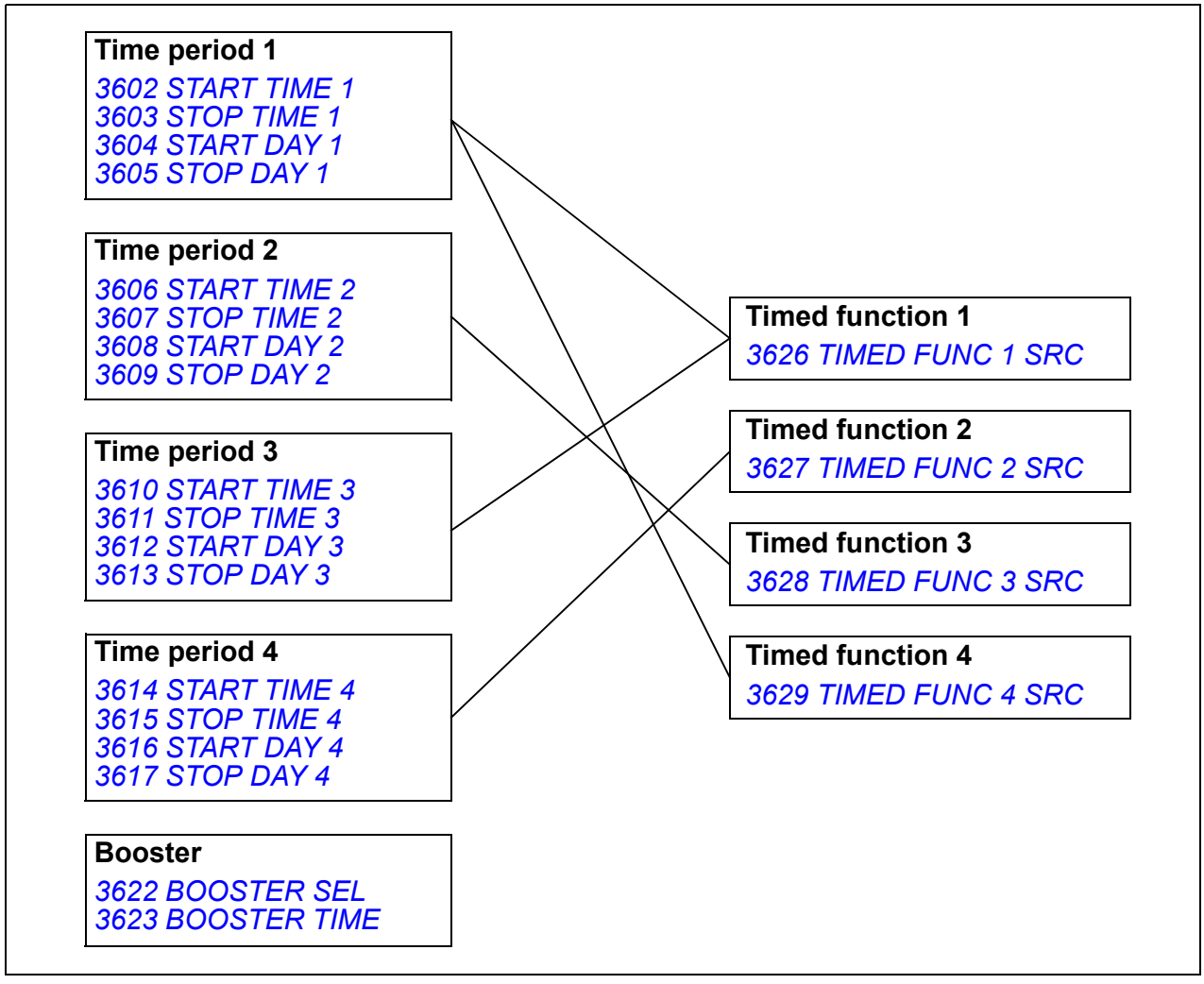

A parameter which is triggered by a timed function can be connected to only one timed function at a time.

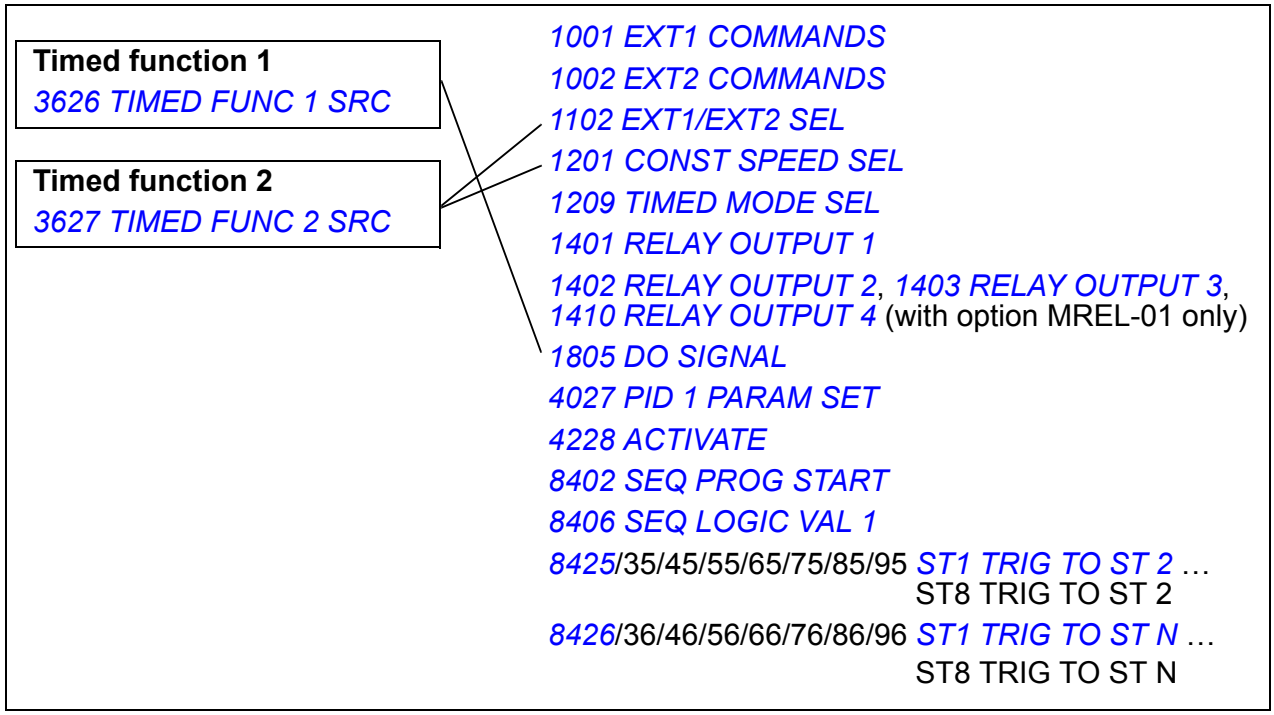

You can use the Timed functions assistant for easy configuring. For more information on the assistants, see section *Assistants mode* on page *98*.

Example

Air conditioning is active on weekdays from 8:00 to 15:30 (8 a.m to 3:30 p.m) and on Sundays from 12:00 to 15:00 (12 to 3 p.m). By pressing the extension time switch, the air-conditioning is on for an extra hour.

Parameter	Setting
3601 TIMERS ENABLE	*DI1*
3602 START TIME 1	08:00:00
3603 STOP TIME 1	15:30:00
3604 START DAY 1	*MONDAY*
3605 STOP DAY 1	*FRIDAY*
3606 START TIME 2	12:00:00
3607 STOP TIME 2	15:00:00
3608 START DAY 2	*SUNDAY*
3609 STOP DAY 2	*SUNDAY*
3622 BOOSTER SEL	*DI5* (cannot be the same as parameter *3601* value)
3623 BOOSTER TIME	01:00:00
3626 TIMED FUNC 1 SRC	*T1+T2+B*

Settings

Parameter	Additional information
36 TIMED FUNCTIONS	Timed functions settings
1001, *1002*	Timed start/stop control
1102	Timed EXT1/EXT2 selection
1201	Timed constant speed 1 activation
1209	Timed speed selection
1401	Timed function status indicated through relay output RO 1
1402/*1403*/*1410*	Timed function status indicated through relay output RO 2…4. With option MREL-01 only.
1805	Timed function status indicated through digital output DO
4027	Timed PID1 parameter set 1/2 selection
4228	Timed external PID2 activation
8402	Timed Sequence programming activation
8425/*8435*/…/*8495* *8426*/*8436*/…/*8496*	Sequence programming state change trigger with timed function

Timer

Drive start and stop can be controlled with timer functions.

Settings

Parameter	Additional information
1001, *1002*	Start/stop signal sources
Group *19 TIMER & COUNTER*	Timer for start and stop

Diagnostics

Actual signal	Additional information
0165	Start/stop control time count

Counter

Drive start and stop can be controlled with counter functions. The counter function can also be used as state change trigger signal in Sequence programming. See section *Sequence programming* on page *166*.

Settings

Parameter	Additional information
1001, *1002*	Start/Stop signal sources
Group *19 TIMER & COUNTER*	Timer for start and stop
8425, *8426* / *8435*, *8436* /…/*8495*, *8496*	Counter signal as state change trigger in Sequence programming

Diagnostics

Actual signal	Additional information
0166	Start/stop control pulse count

Sequence programming

The drive can be programmed to perform a sequence where the drive shifts typically through 1…8 states. User defines the operation rules for the whole sequence and for each state. The rules of a particular state are effective when the Sequence program is active and the program has entered the state. The rules to be defined for each state are:

- Run, stop and direction commands for the drive (forward/reverse/stop)
- Acceleration and deceleration ramp time for the drive
- Source for the drive reference value
- State duration
- RO/DO/AO status
- Signal source for triggering the shift to the next state
- Signal source for triggering the shift to any state (1…8).

Every state can also activate drive outputs to give an indication to external devices.

Sequence programming allows state transitions either to the next state or to a selected state. State change can be activated with eg timed functions, digital inputs and supervision functions.

Sequence programming can be applied in simple mixer applications as well as in more complicated traverse applications.

The programming can be done with control panel or with a PC tool. The drive is supported by version 2.91 or later of the DriveWindow Light 2 PC tool which includes a graphical Sequence programming tool.

Note: By default all Sequence programming parameters can be changed even when the Sequence programming is active. It is recommended that after the Sequence programming parameters are set, parameters are locked with parameter *1602 PARAMETER LOCK*.

Settings

Parameter	Additional information
1001/*1002*	Start, stop and direction commands for EXT1/EXT2
1102	EXT1/EXT2 selection
1106	REF2 source
1201	Constant speed deactivation. Constant speed always overrides the Sequence programming reference.
1401	Sequence programming output through RO 1

Parameter	Additional information
1402/*1403*/*1410*	Sequence programming output through relay output RO 2…4. With option MREL-01 only.
1501	Sequence programming output through AO
1601	Run enable activation/deactivation
1805	Sequence programming output through DO
Group *19 TIMER & COUNTER*	State change according to counter limit
Group *32 SUPERVISION*	Timed state change
2201…*2207*	Acceleration/deceleration and ramp time settings
Group *32 SUPERVISION*	Supervision settings
4010/*4110*/*4210*	Sequence programming output as PID reference signal
Group *84 SEQUENCE PROG*	Sequence programming settings

Diagnostics

Actual signal	Additional information
0167	Sequence programming status
0168	Sequence programming active state
0169	Current state time counter
0170	Analog output PID reference control values
0171	Executed sequence counter

State shifts

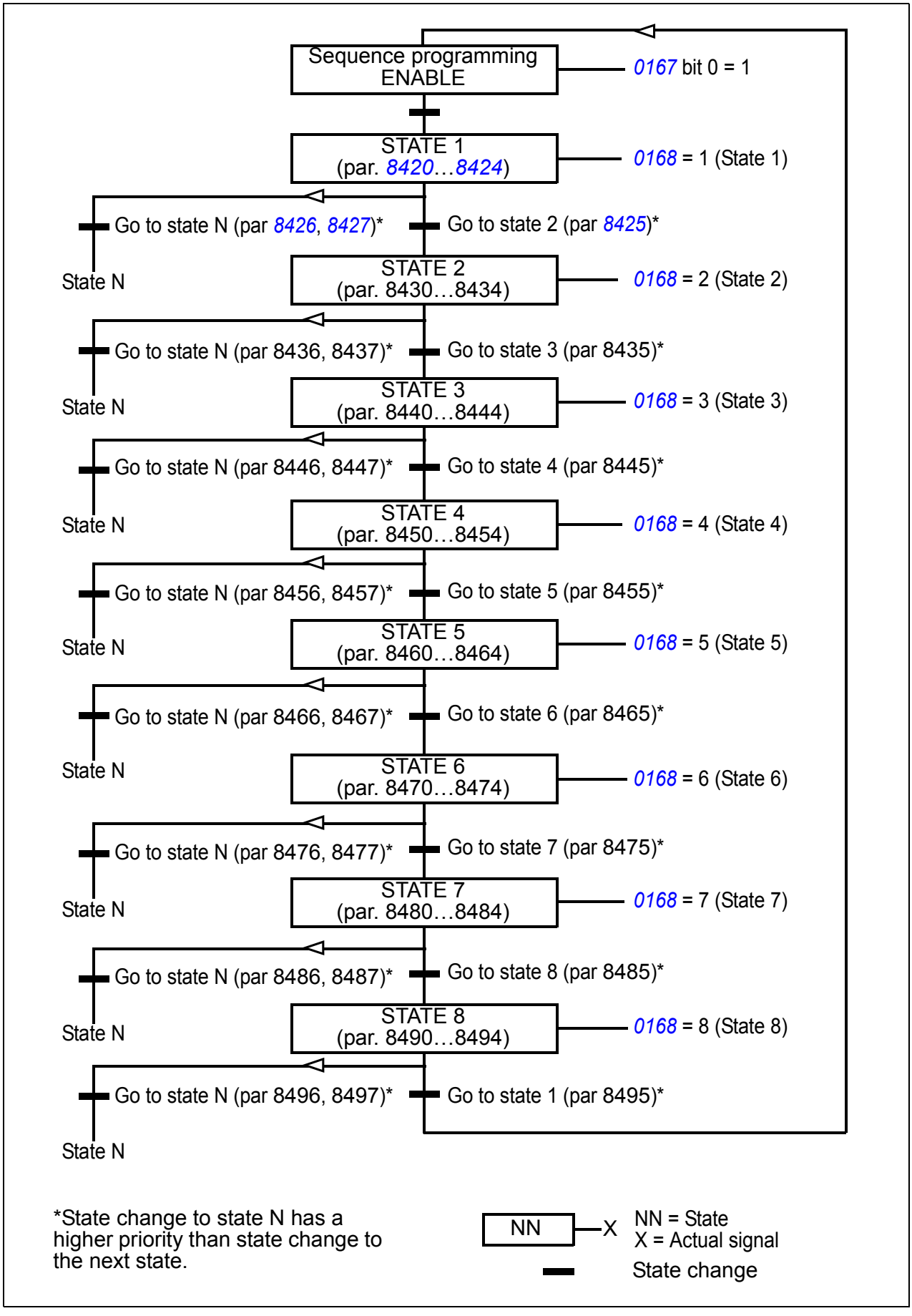

Example 1

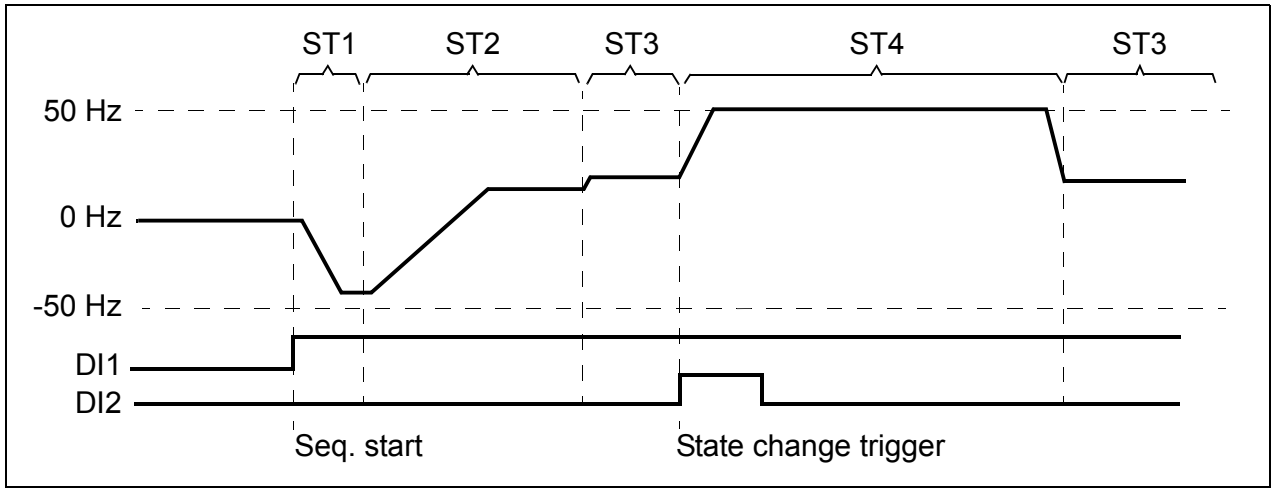

Sequence programming is activated by digital input DI1.

ST1: Drive is started in reverse direction with -50 Hz reference and 10 s ramp time. State 1 is active for 40 s.

ST2: Drive is accelerated to 20 Hz with 60 s ramp time. State 2 is active for 120 s.

ST3: Drive is accelerated to 25 Hz with 5 s ramp time. State 3 is active until the Sequence programming is disabled or until booster start is activated by DI2.

ST4: Drive is accelerated to 50 Hz with 5 s ramp time. State 4 is active for 200 s and after that the state shifts back to state 3.

Parameter	Setting	Additional information
1002 EXT2 COMMANDS	*SEQ PROG*	Start, stop, direction commands for EXT2
1102 EXT1/EXT2 SEL	*EXT2*	EXT2 activation
1106 REF2 SELECT	*SEQ PROG*	Sequence programming output as REF2
1601 RUN ENABLE	*NOT SEL*	Deactivation of Run enable
2102 STOP FUNCTION	*RAMP*	Ramp stop
2201 ACC/DEC 1/2 SEL	*SEQ PROG*	Ramp as defined by parameter *8422*/…/*8452*.
8401 SEQ PROG ENABLE	*ALWAYS*	Sequence programming enabled
8402 SEQ PROG START	*DI1*	Sequence programming activation through digital input (DI1)
8404 SEQ PROG RESET	*DI1(INV)*	Sequence programming reset (ie reset to state 1, when DI1 signal is lost (1 -> 0)

ST1		ST2		ST3		ST4		Additional information
Par.	**Setting**	**Par.**	**Setting**	**Par.**	**Setting**	**Par.**	**Setting**	
8420 ST1 REF SEL	100%	*8430*	40%	*8440*	50%	*8450*	100%	State reference
8421 ST1 COMMANDS	*START REV*	*8431*	*START FRW*	*8441*	*START FRW*	*8451*	*START FRW*	Run, direction and stop command
8422 ST1 RAMP	10 s	*8432*	60 s	*8442*	5 s	*8452*	5 s	Ramp time
8424 ST1 CHANGE DLY	40 s	*8434*	120 s	*8444*		*8454*	200 s	State change delay
8425 ST1 TRIG TO ST 2	*CHANGE DLY*	*8435*	*CHANGE DLY*	*8445*	*DI2*	*8455*		State change trigger
8426 ST1 TRIG TO ST N	*NOT SEL*	*8436*	*NOT SEL*	*8446*	*NOT SEL*	*8456*	*CHANGE DLY*	
8427 ST1 STATE N	-	*8437*	-	*8447*	-	*8457*	*STATE 3*	

Example 2

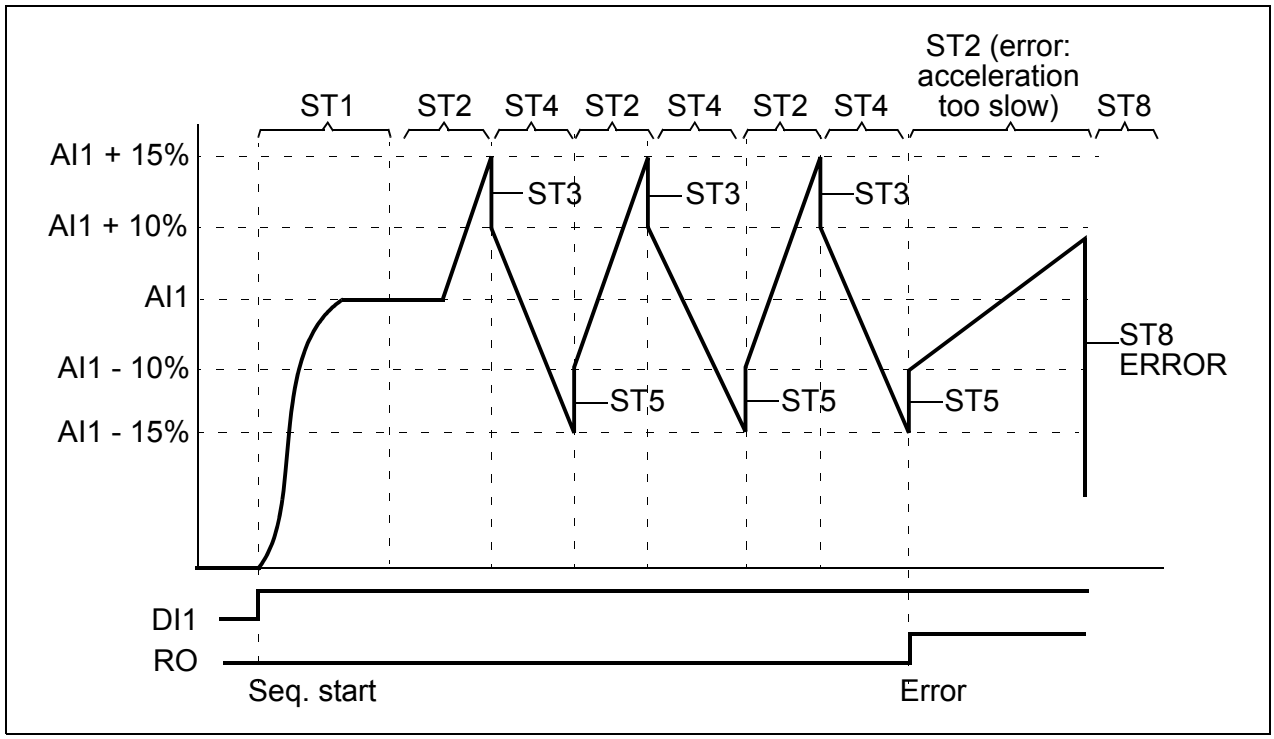

Drive is programmed for traverse control with 30 sequences.

Sequence programming is activated by digital input DI1

ST1: Drive is started in forward direction with AI1 (AI1 + 50% - 50%) reference and ramp pair 2. State shifts to the next state when reference is reached. All relay and analog outputs are cleared.

ST2: Drive is accelerated with AI1 + 15% (AI1 + 65% - 50%) reference and 1.5 s ramp time. State shifts to the next state when reference is reached. If reference is not reached within 2 s, state shifts to state 8 (error state).

ST3: Drive is decelerated with AI1 + 10% (AI1 + 60% - 50%) reference and 0 s ramp time[1)]. State shifts to the next state when reference is reached. If reference is not reached within 0.2 s, state shifts to state 8 (error state).

ST4: Drive is decelerated with AI1 - 15% (AI1 + 35% -50%) reference and 1.5 s ramp time. State shifts to the next state when reference is reached. If reference is not reached within 2 s, state shifts to state 8 (error state).[2)]

ST5: Drive is accelerated with AI1 -10% (AI1 + 40% -50%) reference and 0 s ramp time[1)]. State shifts to the next state when reference is reached. Sequence counter value is increased by 1. If sequence counter elapses, state shifts to state 7 (sequence completed).

ST6: Drive reference and ramp times are the same as in state 2. Drive state shifts immediately to state 2 (delay time is 0 s).

ST7 (sequence completed): Drive is stopped with ramp pair 1. Digital output DO is activated. If Sequence programming is deactivated by the falling edge of digital input DI1, state machine is reset to state 1. New start command can be activated by digital input DI1 or by digital inputs DI4 and DI5 (both inputs DI4 and DI5 must be simultaneously active).

ST8 (error state): Drive is stopped with ramp pair 1. Relay output RO is activated. If Sequence programming is deactivated by the falling edge of digital input DI1, state machine is reset to state 1. New start command can be activated by digital input DI1 or by digital inputs DI4 and DI5 (both inputs DI4 and DI5 must be simultaneously active).

[1)] 0 second ramp time = drive is accelerated/decelerated as rapidly as possible.

[2)] State reference must be between 0…100%, ie scaled AI1 value must be between 15…85%. If AI1 = 0, reference = 0% + 35% -50% = -15% < 0%.

Parameter	Setting	Additional information
1002 EXT2 COMMANDS	*SEQ PROG*	Start, stop, direction commands for EXT2
1102 EXT1/EXT2 SEL	*EXT2*	EXT2 activation
1106 REF2 SELECT	*AI1+SEQ PROG*	Sequence programming output as REF2
1201 CONST SPEED SEL	*NOT SEL*	Deactivation of constant speeds
1401 RELAY OUTPUT 1	*SEQ PROG*	Relay output RO 1 control as defined by parameter *8423*/…/*8493*
1601 RUN ENABLE	*NOT SEL*	Deactivation of Run enable
1805 DO SIGNAL	*SEQ PROG*	Digital output DO control as defined by parameter *8423*/…/*8493*
2102 STOP FUNCTION	*RAMP*	Ramp stop
2201 ACC/DEC 1/2 SEL	*SEQ PROG*	Ramp as defined by parameter *8422*/…/*8452*.
2202 ACCELER TIME 1	1 s	Acceleration/deceleration ramp pair 1
2203 DECELER TIME 1	0 s	
2205 ACCELER TIME 2	20 s	Acceleration/deceleration ramp pair 2
2206 DECELER TIME 2	20 s	
2207 RAMP SHAPE 2	5 s	Shape of the acceleration/deceleration ramp 2
3201 SUPERV 1 PARAM	171	Sequence counter (signal *0171 SEQ CYCLE CNTR*) supervision
3202 SUPERV 1 LIM LO	30	Supervision low limit
3203 SUPERV 1 LIM HI	30	Supervision high limit
8401 SEQ PROG ENABLE	*EXT2*	Sequence programming enabled
8402 SEQ PROG START	*DI1*	Sequence programming activation through digital input (DI1)
8404 SEQ PROG RESET	*DI1(INV)*	Sequence programming reset (ie reset to state 1, when DI1 signal is lost (1 -> 0)
8406 SEQ LOGIC VAL 1	*DI4*	Logic value 1
8407 SEQ LOGIC OPER 1	*AND*	Operation between logic value 1 and 2
8408 SEQ LOGIC VAL 2	*DI5*	Logic value 2
8415 CYCLE CNT LOC	*ST5 TO NEXT*	Sequence counter activation, ie sequence count increases every time the state changes from state 5 to state 6.
8416 CYCLE CNT RST	*STATE 1*	Sequence counter reset during state transition to state 1

ST1		ST2		ST3		ST4		Additional information
Par.	**Setting**	**Par.**	**Setting**	**Par.**	**Setting**	**Par.**	**Setting**	
8420 ST1 REF SEL	50%	*8430*	65%	*8440*	60%	*8450*	35%	State reference
8421 ST1 COMMANDS	*START FRW*	*8431*	*START FRW*	*8441*	*START FRW*	*8451*	*START FRW*	Run, direction and stop commands
8422 ST1 RAMP	-0.2 (ramp pair 2)	*8432*	1.5 s	*8442*	0 s	*8452*	1.5 s	Acceleration/ deceleration ramp time
8423 ST1 OUT CONTROL	*R=0,D=0, AO=0*	*8433*	*AO=0*	*8443*	*AO=0*	*8453*	*AO=0*	Relay, digital and analog output control
8424 ST1 CHANGE DLY	0 s	*8434*	2 s	*8444*	0.2 s	*8454*	2 s	State change delay
8425 ST1 TRIG TO ST 2	*ENTER SETPNT*	*8435*	*ENTER SETPNT*	*8445*	*ENTER SETPNT*	*8455*	*ENTER SETPNT*	State change trigger
8426 ST1 TRIG TO ST N	*NOT SEL*	*8436*	*CHANGE DLY*	*8446*	*CHANGE DLY*	*8456*	*CHANGE DLY*	
8427 ST1 STATE N	*STATE 1*	*8437*	*STATE 8*	*8447*	*STATE 8*	*8457*	*STATE 8*	

ST5		ST6		ST7		ST8		Additional information
Par.	**Setting**	**Par.**	**Setting**	**Par.**	**Setting**	**Par.**	**Setting**	
8460 ST5 REF SEL	40%	*8470*	65%	*8480*	0%	*8490*	0%	State reference
8461 ST5 COMMANDS	*START FRW*	*8471*	*START FRW*	*8481*	*DRIVE STOP*	*8491*	*DRIVE STOP*	Run, direction and stop commands
8462 ST5 RAMP	0 s	*8472*	1.5 s	*8482*	-0.1 (ramp pair 1)	*8492*	-0.1 (ramp pair 1)	Acceleration/ deceleration ramp time
8463 ST5 OUT CONTROL	*AO=0*	*8473*	*AO=0*	*8483*	*DO=1*	*8493*	*RO=1*	Relay, digital and analog output control
8464 ST5 CHANGE DLY	0.2 s	*8474*	0 s	*8484*	0 s	*8494*	0 s	State change delay
8465 ST5 TRIG TO ST6	*ENTER SETPNT*	*8475*	*NOT SEL*	*8485*	*NOT SEL*	*8495*	*LOGIC VAL*	State change trigger
8466 ST5 TRIG TO ST N	*SUPRV1 OVER*	*8476*	*CHANGE DLY*	*8486*	*LOGIC VAL*	*8496*	*NOT SEL*	
8467 ST5 STATE N	*STATE 7*	*8477*	*STATE 2*	*8487*	*STATE 1*	*8497*	*STATE 1*	

Safe torque off (STO) function

See *Appendix: Safe torque off (STO)* on page *399*.

12

Actual signals and parameters

What this chapter contains

The chapter describes the actual signals and parameters and gives the fieldbus equivalent values for each signal/parameter. It also contains a table of the default values for the different macros.

Terms and abbreviations

Term	Definition
Actual signal	Signal measured or calculated by the drive. Can be monitored by the user. No user setting possible. Groups 01…04 contain actual signals.
Def	Parameter default value
Parameter	A user-adjustable operation instruction of the drive. Groups 10…99 contain parameters. **Note:** Parameter selections are shown on the basic control panel as integer values. Eg parameter *1001 EXT1 COMMANDS* selection *COMM* is shown as value 10 (which is equal to the fieldbus equivalent FbEq).
FbEq	Fieldbus equivalent: The scaling between the value and the integer used in serial communication.
E	Refers to types 01E- and 03E- with European parametrization
U	Refers to types 01U- and 03U- with US parametrization

Fieldbus addresses

For FCAN-01 CANopen adapter, FDNA-01 DeviceNet adapter, FECA-01 EtherCAT adapter, FENA-01 Ethernet adapter, FMBA-01 Modbus adapter, FLON-01 LonWorks® adapter, and FPBA-01 PROFIBUS DP adapter, see the user's manual of the adapter.

Fieldbus equivalent

Example: If *2017 MAX TORQUE 1* (see page *217*) is set from an external control system, an integer value of 1000 corresponds to 100.0%. All the read and sent values are limited to 16 bits (-32768…32767).

Default values with different macros

When application macro is changed (parameter *9902 APPLIC MACRO*), the software updates the parameter values to their default values. The table below shows the parameter default values for different macros. For other parameters, the default values are the same for all macros (shown in the parameter list starting on page *185*).

Index	Name/ Selection	ABB STANDARD	3-WIRE	ALTERNATE	MOTOR POT	HAND/ AUTO	PID CONTROL	TORQUE CONTROL
9902	*APPLIC MACRO*	1 = *ABB STANDARD*	2 = *3-WIRE*	3 = *ALTERNATE*	4 = *MOTOR POT*	5 = *HAND/AUTO*	6 = *PID CONTROL*	7 = *TORQUE CTRL*
1001	*EXT1 COMMANDS*	2 = *DI1,2*	4 = *DI1P,2P,3*	9 = *DI1F,2R*	2 = *DI1,2*	2 = *DI1,2*	1 = *DI1*	2 = *DI1,2*
1002	*EXT2 COMMANDS*	0 = *NOT SEL*	0 = *NOT SEL*	0 = *NOT SEL*	0 = *NOT SEL*	21 = *DI5,4*	20 = *DI5*	2 = *DI1,2*
1003	*DIRECTION*	3 = *REQUEST*	3 = *REQUEST*	3 = *REQUEST*	3 = *REQUEST*	3 = *REQUEST*	1 = *FORWARD*	3 = *REQUEST*
1102	*EXT1/EXT2 SEL*	0 = *EXT1*	0 = *EXT1*	0 = *EXT1*	0 = *EXT1*	3 = *DI3*	2 = *DI2*	3 = *DI3*
1103	*REF1 SELECT*	1 = *AI1*	1 = *AI1*	1 = *AI1*	12 = *DI3U,4D(NC)*	1 = *AI1*	1 = *AI1*	1 = *AI1*
1106	*REF2 SELECT*	2 = *AI2*	2 = *AI2*	2 = *AI2*	2 = *AI2*	2 = *AI2*	19 = *PID1OUT*	2 = *AI2*
1201	*CONST SPEED SEL*	9 = *DI3,4*	10 = *DI4,5*	9 = *DI3,4*	5 = *DI5*	0 = *NOT SEL*	3 = *DI3*	4 = *DI4*
1304	*MINIMUM AI2*	1.0%	1.0%	1.0%	1.0%	20.0%	20.0%	20.0%
1501	*AO1 CONTENT SEL*	103	102	102	102	102	102	102
1601	*RUN ENABLE*	0 = *NOT SEL*	0 = *NOT SEL*	0 = *NOT SEL*	0 = *NOT SEL*	0 = *NOT SEL*	4 = *DI4*	0 = *NOT SEL*
2201	*ACC/DEC 1/2 SEL*	5 = *DI5*	0 = *NOT SEL*	5 = *DI5*	0 = *NOT SEL*	0 = *NOT SEL*	0 = *NOT SEL*	5 = *DI5*
3201	*SUPERV 1 PARAM*	103	102	102	102	102	102	102
3401	*SIGNAL1 PARAM*	103	102	102	102	102	102	102
9904	*MOTOR CTRL MODE*	3 = *SCALAR: FREQ*	1 = *VECTOR: SPEED*	1 = *VECTOR: SPEED*	1 = *VECTOR: SPEED*	1 = *VECTOR: SPEED*	1 = *VECTOR: SPEED*	2 = *VECTOR: TORQ*

Note: It is possible to control several functions with one input (DI or AI), and there is a chance of mismatch between these functions. In some cases it is desired to control several functions with one input.

For example in the ABB standard macro, DI3 and DI4 are set to control constant speeds. On the other hand, it is possible to select value 6 (*DI3U,4D*) for parameter

1103 REF1 SELECT. That would mean a mismatched duplicate functionality for DI3 and DI4: either constant speed or acceleration and deceleration. The function that is not required must be disabled. In this case the constant speed selection must be disabled by setting parameter *1201 CONST SPEED SEL* to *NOT SEL* or to values not related to DI3 and DI4.

Remember to also check the default values of the selected macro when configuring the drive inputs.

Actual signals

Actual signals		
No. Name/Value	**Description**	**FbEq**
01 OPERATING DATA	Basic signals for monitoring the drive (read-only)	
0101 SPEED & DIR	Calculated motor speed in rpm. A negative value indicates reverse direction.	1 = 1 rpm
0102 SPEED	Calculated motor speed in rpm	1 = 1 rpm
0103 OUTPUT FREQ	Calculated drive output frequency in Hz. (Shown by default on the panel Output mode display.)	1 = 0.1 Hz
0104 CURRENT	Measured motor current in A. (Shown by default on the panel Output mode display.)	1 = 0.1 A
0105 TORQUE	Calculated motor torque in percent of the motor nominal torque	1 = 0.1%
0106 POWER	Measured motor power in kW	1 = 0.1 kW
0107 DC BUS VOLTAGE	Measured intermediate circuit voltage in V DC	1 = 1 V
0109 OUTPUT VOLTAGE	Calculated motor voltage in V AC	1 = 1 V
0110 DRIVE TEMP	Measured IGBT temperature in °C	1 = 0.1 °C
0111 EXTERNAL REF 1	External reference REF1 in rpm or Hz. Unit depends on parameter *9904 MOTOR CTRL MODE* setting.	1 = 0.1 Hz / 1 rpm
0112 EXTERNAL REF 2	External reference REF2 in percent. Depending on the use, 100% equals the maximum motor speed, nominal motor torque, or maximum process reference.	1 = 0.1%
0113 CTRL LOCATION	Active control location. (0) LOCAL; (1) EXT1; (2) EXT2. See section *Local control vs. external control* on page *125*.	1 = 1
0114 RUN TIME (R)	Elapsed drive running time counter (hours). Runs when the drive is modulating. The counter can be reset by pressing the UP and DOWN keys simultaneously when the control panel is in the Parameter mode.	1 = 1 h
0115 KWH COUNTER (R)	kWh counter. The counter value is accumulated till it reaches 65535 after which the counter rolls over and starts again from 0. The counter can be reset by pressing UP and DOWN keys simultaneously when the control panel is in the Parameter mode.	1 = 1 kWh
0120 AI 1	Relative value of analog input AI1 in percent	1 = 0.1%
0121 AI 2	Relative value of analog input AI2 in percent	1 = 0.1%
0124 AO 1	Value of analog output AO in mA	1 = 0.1 mA
0126 PID 1 OUTPUT	Output value of the process PID1 controller in percent	1 = 0.1%
0127 PID 2 OUTPUT	Output value of the PID2 controller in percent	1 = 0.1%
0128 PID 1 SETPNT	Setpoint signal (reference) for the process PID1 controller. Unit depends on parameter *4006 UNITS*, *4007 UNIT SCALE* and *4027 PID 1 PARAM SET* settings.	-

Actual signals			
No.	**Name/Value**	**Description**	**FbEq**
0129	PID 2 SETPNT	Setpoint signal (reference) for the PID2 controller. Unit depends on parameter *4106 UNITS* and *4107 UNIT SCALE* settings.	-
0130	PID 1 FBK	Feedback signal for the process PID1 controller. Unit depends on parameter *4006 UNITS*, *4007 UNIT SCALE* and *4027 PID 1 PARAM SET* settings.	-
0131	PID 2 FBK	Feedback signal for the PID2 controller. Unit depends on parameter *4106 UNITS* and *4107 UNIT SCALE* settings.	-
0132	PID 1 DEVIATION	Deviation of the process PID1 controller, ie the difference between the reference value and the actual value. Unit depends on parameter *4006 UNITS*, *4007 UNIT SCALE* and *4027 PID 1 PARAM SET* settings.	-
0133	PID 2 DEVIATION	Deviation of the PID2 controller, ie the difference between the reference value and the actual value. Unit depends on parameter *4106 UNITS* and *4107 UNIT SCALE* settings.	-
0134	COMM RO WORD	Relay output Control word through fieldbus (decimal). See parameter *1401 RELAY OUTPUT 1*.	1 = 1
0135	COMM VALUE 1	Data received from fieldbus	1 = 1
0136	COMM VALUE 2	Data received from fieldbus	1 = 1
0137	PROCESS VAR 1	Process variable 1 defined by parameter group *34 PANEL DISPLAY*	-
0138	PROCESS VAR 2	Process variable 2 defined by parameter group *34 PANEL DISPLAY*	-
0139	PROCESS VAR 3	Process variable 3 defined by parameter group *34 PANEL DISPLAY*	-
0140	RUN TIME	Elapsed drive running time counter (thousands of hours). Runs when the drive is modulating. Counter cannot be reset.	1 = 0.01 kh
0141	MWH COUNTER	MWH counter. The counter value is accumulated till it reaches 65535 after which the counter rolls over and starts again from 0. Cannot be reset.	1 = 1 MWh
0142	REVOLUTION CNTR	Motor revolution counter (millions of revolutions). The counter can be reset by pressing UP and DOWN keys simultaneously when the control panel is in the Parameter mode.	1 = 1 Mrev
0143	DRIVE ON TIME HI	Drive control board power-on time in days. Counter cannot be reset.	1 = 1 days
0144	DRIVE ON TIME LO	Drive control board power-on time in 2 second ticks (30 ticks = 60 seconds). Counter cannot be reset.	1 = 2 s
0145	MOTOR TEMP	Measured motor temperature. Unit depends on the sensor type selected by group *35 MOTOR TEMP MEAS* parameters.	1 = 1
0146	MECH ANGLE	Calculated mechanical angle	1 = 1

Actual signals			
No.	**Name/Value**	**Description**	**FbEq**
0147	MECH REVS	Mechanical revolutions, ie the motor shaft revolutions calculated by the encoder	1 = 1
0148	Z PLS DETECTED	Encoder zero pulse detector. 0 = not detected, 1 = detected.	1 = 1
0150	CB TEMP	Temperature of the drive control board in degrees Celsius (0.0…150.0 °C).	1 = 0.1 °C
0158	PID COMM VALUE 1	Data received from fieldbus for PID control (PID1 and PID2)	1 = 1
0159	PID COMM VALUE 2	Data received from fieldbus for PID control (PID1 and PID2)	1 = 1
0160	DI 1-5 STATUS	Status of digital inputs. **Example:** 10000 = DI1 is on, DI2…DI5 are off.	
0161	PULSE INPUT FREQ	Value of frequency input in Hz	1 = 1 Hz
0162	RO STATUS	Status of relay output 1. 1 = RO is energized, 0 = RO is de-energized.	1 = 1
0163	TO STATUS	Status of transistor output, when transistor output is used as a digital output.	1 = 1
0164	TO FREQUENCY	Transistor output frequency, when transistor output is used as a frequency output.	1 = 1 Hz
0165	TIMER VALUE	Timer value of timed start/stop. See parameter group *19 TIMER & COUNTER*.	1 = 0.01 s
0166	COUNTER VALUE	Pulse counter value of counter start/stop. See parameter group *19 TIMER & COUNTER*.	1 = 1
0167	SEQ PROG STS	Status word of the Sequence programming: Bit 0 = ENABLED (1 = enabled) Bit 1 = STARTED Bit 2 = PAUSED Bit 3 = LOGIC VALUE (logic operation defined by parameters *8406*…*8410*).	1 = 1
0168	SEQ PROG STATE	Active state of the Sequence programming. 1…8 = state 1…8.	1 = 1
0169	SEQ PROG TIMER	Current state time counter of the Sequence programming	1 = 2 s
0170	SEQ PROG AO VAL	Analog output control values defined by the Sequence programming. See parameter *8423 ST1 OUT CONTROL*.	1 = 0.1%
0171	SEQ CYCLE CNTR	Executed sequence counter of the Sequence programming. See parameters *8415 CYCLE CNT LOC* and *8416 CYCLE CNT RST*.	1 = 1
0172	ABS TORQUE	Calculated absolute value of the motor torque in percent of the motor nominal torque	1 = 0.1%

Actual signals			
No.	**Name/Value**	**Description**	**FbEq**
0173	RO 2-4 STATUS	Status of the relays in the MREL-01 relay output extension module. See *MREL-01 relay output extension module user's manual* (3AUA0000035974 [English]). **Example:** 100 = RO 2 is on, RO 3 and RO 4 are off.	
0179	BRAKE TORQUE MEM	Vector control: Torque value (0…180% of the motor nominal torque) saved before the mechanical brake is taken in use. Scalar control: Current value (0…180% of the motor nominal current) saved before the mechanical brake is taken in use. This torque or current is applied when the drive is started. See parameter *4307 BRK OPEN LVL SEL*.	1 = 0.1%
0180	ENC SYNCHRONIZED	Monitors the synchronization of the measured position with the estimated position for permanent magnet motors. 0 = NOT SYNC, 1 = SYNC.	1 = 1
03 FB ACTUAL SIGNALS		Data words for monitoring the fieldbus communication (read-only). Each signal is a 16-bit data word. Data words are displayed on the panel in hexadecimal format.	
0301	FB CMD WORD 1	A 16-bit data word. See section *DCU communication profile* on page *320*.	
0302	FB CMD WORD 2	A 16-bit data word. See section *DCU communication profile* on page *320*	
0303	FB STS WORD 1	A 16-bit data word. See section *DCU communication profile* on page *320*.	
0304	FB STS WORD 2	A 16-bit data word. See section *DCU communication profile* on page *320*	
0305	FAULT WORD 1	A 16-bit data word. For the possible causes and remedies and fieldbus equivalents, see chapter *Fault tracing* on page *335*.	
		Bit 0 = *OVERCURRENT*	
		Bit 1 = *DC OVERVOLT*	
		Bit 2 = *DEV OVERTEMP*	
		Bit 3 = *SHORT CIRC*	
		Bit 4 = Reserved	
		Bit 5 = *DC UNDERVOLT*	
		Bit 6 = *AI1 LOSS*	
		Bit 7 = *AI2 LOSS*	
		Bit 8 = *MOT OVERTEMP*	
		Bit 9 = *PANEL LOSS*	
		Bit 10 = *ID RUN FAIL*	
		Bit 11 = *MOTOR STALL*	
		Bit 12 = *CB OVERTEMP*	
		Bit 13 = *EXT FAULT 1*	

Actual signals			
No.	**Name/Value**	**Description**	**FbEq**
		Bit 14 = *EXT FAULT 2*	
		Bit 15 = *EARTH FAULT*	
0306	FAULT WORD 2	A 16-bit data word. For the possible causes and remedies and fieldbus equivalents, see chapter *Fault tracing* on page *335*.	
		Bit 0 = *UNDERLOAD*	
		Bit 1 = *THERM FAIL*	
		Bit 2…3 = Reserved	
		Bit 4 = *CURR MEAS*	
		Bit 5 = *SUPPLY PHASE*	
		Bit 6 = *ENCODER ERR*	
		Bit 7 = *OVERSPEED*	
		Bit 8…9 = Reserved	
		Bit 10 = *CONFIG FILE*	
		Bit 11 = *SERIAL 1 ERR*	
		Bit 12 = *EFB CON FILE*. Configuration file reading error.	
		Bit 13 = *FORCE TRIP*	
		Bit 14 = *MOTOR PHASE*	
		Bit 15 = *OUTP WIRING*	
0307	FAULT WORD 3	A 16-bit data word. For the possible causes and remedies and fieldbus equivalents, see chapter *Fault tracing* on page *335*.	
		Bit 0…2 Reserved	
		Bit 3 = *INCOMPATIBLE SW*	
		Bit 4 = *SAFE TORQUE OFF*	
		Bit 5 = *STO1 LOST*	
		Bit 6 = *STO2 LOST*	
		Bit 7…10 Reserved	
		Bit 11 = *CB ID ERROR*	
		Bit 12 = *DSP STACK ERROR*	
		Bit 13 = *DSP T1 OVERLOAD*…*DSP T3 OVERLOAD*	
		Bit 14 = *SERF CORRUPT* / *SERF MACRO*	
		Bit 15 = *PAR PCU 1* / *PAR PCU 2* / *PAR HZRPM* / *PAR AI SCALE* / *PAR AO SCALE* / *PAR FBUSMISS* / *PAR CUSTOM U/F*	
0308	ALARM WORD 1	A 16-bit data word. For the possible causes and remedies and fieldbus equivalents, see chapter *Fault tracing* on page *335*. An alarm can be reset by resetting the whole alarm word: Write zero to the word.	
		Bit 0 = *OVERCURRENT*	
		Bit 1 = *OVERVOLTAGE*	

Actual signals			
No.	**Name/Value**	**Description**	**FbEq**
		Bit 2 = *UNDERVOLTAGE*	
		Bit 3 = *DIR LOCK*	
		Bit 4 = *IO COMM*	
		Bit 5 = *AI1 LOSS*	
		Bit 6 = *AI2 LOSS*	
		Bit 7 = *PANEL LOSS*	
		Bit 8 = *DEVICE OVERTEMP*	
		Bit 9 = *MOTOR TEMP*	
		Bit 10 = *UNDERLOAD*	
		Bit 11 = *MOTOR STALL*	
		Bit 12 = *AUTORESET*	
		Bit 13…15 = Reserved	
0309	ALARM WORD 2	A 16-bit data word. For the possible causes and remedies and fieldbus equivalents, see chapter *Fault tracing* on page *335*. An alarm can be reset by resetting the whole alarm word: Write zero to the word.	
		Bit 0 = Reserved	
		Bit 1 = *PID SLEEP*	
		Bit 2 = *ID RUN*	
		Bit 3 = Reserved	
		Bit 4 = *START ENABLE 1 MISSING*	
		Bit 5 = *START ENABLE 2 MISSING*	
		Bit 6 = *EMERGENCY STOP*	
		Bit 7 = *ENCODER ERROR*	
		Bit 8 = *FIRST START*	
		Bit 9 = *INPUT PHASE LOSS*	
		Bit 10…11 = Reserved	
		Bit 12 = *MOTOR BACK EMF*	
		Bit 13 = *SAFE TORQUE OFF*	
		Bit 14…15 = Reserved	
04 FAULT HISTORY		Fault history (read-only)	
0401	LAST FAULT	Code of the latest fault. See chapter *Fault tracing* on page *335* for the codes. 0 = Fault history is clear (on panel display = NO RECORD).	1 = 1
0402	FAULT TIME 1	Day on which the latest fault occurred. Format: Date if the real time clock is operating. / The number of days elapsed after the power-on if the real time clock is not used, or was not set.	1 = 1 days

Actual signals			
No.	**Name/Value**	**Description**	**FbEq**
0403	FAULT TIME 2	Time at which the latest fault occurred. Format on the assistant control panel: Real time (hh:mm:ss) if the real time clock is operating. / Time elapsed after the power-on (hh:mm:ss minus the whole days stated by signal *0402 FAULT TIME 1*) if real time clock is not used, or was not set. Format on the basic control panel: Time elapsed after power-on in 2 second ticks (minus the whole days stated by signal *0402 FAULT TIME 1*). 30 ticks = 60 seconds. Eg value 514 equals 17 minutes and 8 seconds (= 514/30).	1 = 2 s
0404	SPEED AT FLT	Motor speed in rpm at the time the latest fault occurred	1 = 1 rpm
0405	FREQ AT FLT	Frequency in Hz at the time the latest fault occurred	1 = 0.1 Hz
0406	VOLTAGE AT FLT	Intermediate circuit voltage in V DC at the time the latest fault occurred	1 = 0.1 V
0407	CURRENT AT FLT	Motor current in A at the time the latest fault occurred	1 = 0.1 A
0408	TORQUE AT FLT	Motor torque in percent of the motor nominal torque at the time the latest fault occurred	1 = 0.1%
0409	STATUS AT FLT	Drive status in hexadecimal format at the time the latest fault occurred	
0412	PREVIOUS FAULT 1	Fault code of the 2nd latest fault. See chapter *Fault tracing* on page *335* for the codes.	1 = 1
0413	PREVIOUS FAULT 2	Fault code of the 3rd latest fault. See chapter *Fault tracing* on page *335* for the codes.	1 = 1
0414	DI 1-5 AT FLT	Status of digital inputs DI1…5 at the time the latest fault occurred (binary). **Example:** 10000 = DI1 is on, DI2…DI5 are off.	

Parameters

All parameters			
No.	**Name/Value**	**Description**	**Def/FbEq**
10 START/STOP/DIR		The sources for external start, stop and direction control	
1001	EXT1 COMMANDS	Defines the connections and the source for the start, stop and direction commands for external control location 1 (EXT1). **Note:** Start signal must be reset if the drive has been stopped through STO (Safe torque off) input (see parameter *3025 STO OPERATION*) or emergency stop selection (see parameter *2109 EMERG STOP SEL*).	*DI1,2*
	NOT SEL	No start, stop and direction command source	0
	DI1	Start and stop through digital input DI1. 0 = stop, 1 = start. Direction is fixed according to parameter *1003 DIRECTION* (setting *REQUEST* = *FORWARD*).	1
	DI1,2	Start and stop through digital input DI1. 0 = stop, 1 = start. Direction through digital input DI2. 0 = forward, 1 = reverse. To control direction, parameter *1003 DIRECTION* setting must be *REQUEST*.	2
	DI1P,2P	Pulse start through digital input DI1. 0 -> 1: Start. (In order to start the drive, digital input DI2 must be activated prior to the pulse fed to DI1.) Pulse stop through digital input DI2. 1 -> 0: Stop. Direction of rotation is fixed according to parameter *1003 DIRECTION* (setting *REQUEST* = *FORWARD*). **Note:** When the stop input (DI2) is deactivated (no input), the control panel start and stop keys are disabled.	3
	DI1P,2P,3	Pulse start through digital input DI1. 0 -> 1: Start. (In order to start the drive, digital input DI2 must be activated prior to the pulse fed to DI1.) Pulse stop through digital input DI2. 1 -> 0: Stop. Direction through digital input DI3. 0 = forward, 1 = reverse. To control direction, parameter *1003 DIRECTION* setting must be *REQUEST*. **Note:** When the stop input (DI2) is deactivated (no input), the control panel start and stop keys are disabled.	4
	DI1P,2P,3P	Pulse start forward through digital input DI1. 0 -> 1: Start forward. Pulse start reverse through digital input DI2. 0 -> 1: Start reverse. (In order to start the drive, digital input DI3 must be activated prior to the pulse fed to DI1/DI2). Pulse stop through digital input DI3. 1 -> 0: Stop. To control the direction, parameter *1003 DIRECTION* setting must be *REQUEST*. **Note:** When the stop input (DI3) is deactivated (no input), the control panel start and stop keys are disabled.	5

<table>
<tr><th colspan="3">All parameters</th></tr>
<tr><th>No. Name/Value</th><th>Description</th><th>Def/FbEq</th></tr>
<tr><td>KEYPAD</td><td>Start, stop and direction commands through control panel when EXT1 is active. To control the direction, parameter 1003 DIRECTION setting must be REQUEST.</td><td>8</td></tr>
<tr><td>DI1F,2R</td><td>Start, stop and direction commands through digital inputs DI1 and DI2.
<table><tr><th>DI1</th><th>DI2</th><th>Operation</th></tr><tr><td>0</td><td>0</td><td>Stop</td></tr><tr><td>1</td><td>0</td><td>Start forward</td></tr><tr><td>0</td><td>1</td><td>Start reverse</td></tr><tr><td>1</td><td>1</td><td>Stop</td></tr></table>Parameter 1003 DIRECTION setting must be REQUEST.</td><td>9</td></tr>
<tr><td>COMM</td><td>Fieldbus interface as the source for the start and stop commands, ie control word 0301 FB CMD WORD 1 bits 0…1. The control word is sent by the fieldbus controller through the fieldbus adapter or embedded fieldbus (Modbus) to the drive. For the control word bits, see section DCU communication profile on page 320.</td><td>10</td></tr>
<tr><td>TIMED FUNC 1</td><td>Timed start/stop control. Timed function 1 active = start, timed function 1 inactive = stop. See parameter group 36 TIMED FUNCTIONS.</td><td>11</td></tr>
<tr><td>TIMED FUNC 2</td><td>See selection TIMED FUNC 1.</td><td>12</td></tr>
<tr><td>TIMED FUNC 3</td><td>See selection TIMED FUNC 1.</td><td>13</td></tr>
<tr><td>TIMED FUNC 4</td><td>See selection TIMED FUNC 1.</td><td>14</td></tr>
<tr><td>DI5</td><td>Start and stop through digital input DI5. 0 = stop, 1 = start. Direction is fixed according to parameter 1003 DIRECTION (setting REQUEST = FORWARD).</td><td>20</td></tr>
<tr><td>DI5,4</td><td>Start and stop through digital input DI5. 0 = stop, 1 = start. Direction through digital input DI4. 0 = forward, 1 = reverse. To control direction, parameter 1003 DIRECTION must be REQUEST.</td><td>21</td></tr>
<tr><td>TIMER STOP</td><td>Stop when timer delay defined by parameter 1901 TIMER DELAY has passed. Start with timer start signal. Source for the signal is selected by parameter 1902 TIMER START.</td><td>22</td></tr>
<tr><td>TIMER START</td><td>Start when timer delay defined by parameter 1901 TIMER DELAY has passed. Stop when timer is reset by parameter 1903 TIMER RESET.</td><td>23</td></tr>
<tr><td>COUNTER STOP</td><td>Stop when counter limit defined by parameter 1905 COUNTER LIMIT has been exceeded. Start with counter start signal. Source for the signal is selected by parameter 1911 CNTR S/S COMMAND.</td><td>24</td></tr>
<tr><td>COUNTER START</td><td>Start when counter limit defined by parameter 1905 COUNTER LIMIT has been exceeded. Stop with counter stop signal. Source for the signal is selected by parameter 1911 CNTR S/S COMMAND.</td><td>25</td></tr>
</table>

All parameters			
No.	**Name/Value**	**Description**	**Def/FbEq**
	SEQ PROG	Start, stop and direction commands through Sequence programming. See parameter group *84 SEQUENCE PROG*.	26
1002	EXT2 COMMANDS	Defines the connections and the source for the start, stop and direction commands for external control location 2 (EXT2).	*NOT SEL*
		See parameter *1001 EXT1 COMMANDS*.	
1003	DIRECTION	Enables the control of rotation direction of the motor, or fixes the direction.	*REQUEST*
	FORWARD	Fixed to forward	1
	REVERSE	Fixed to reverse	2
	REQUEST	Control of rotation direction allowed	3
1010	JOGGING SEL	Defines the signal that activates the jogging function. See section *Control of a mechanical brake* on page *157*.	*NOT SEL*
	DI1	Digital input DI1. 0 = jogging inactive, 1 = jogging active.	1
	DI2	See selection DI1.	2
	DI3	See selection DI1.	3
	DI4	See selection DI1.	4
	DI5	See selection DI1.	5
	COMM	Fieldbus interface as the source for jogging 1 or 2 activation, ie control word *0302 FB CMD WORD 2* bits 20 and 21. The control word is sent by the fieldbus controller through the fieldbus adapter or embedded fieldbus (Modbus) to the drive. For the control word bits, see section *DCU communication profile* on page *320*.	6
	NOT SEL	Not selected	0
	DI1(INV)	Inverted digital input DI1. 1 = jogging inactive, 0 = jogging active.	-1
	DI2(INV)	See selection DI1(INV).	-2
	DI3(INV)	See selection DI1(INV).	-3
	DI4(INV)	See selection DI1(INV).	-4
	DI5(INV)	See selection DI1(INV).	-5
11 REFERENCE SELECT		Panel reference type, external control location selection and external reference sources and limits	
1101	KEYPAD REF SEL	Selects the type of the reference in local control mode.	*REF1(Hz/rpm)*
	REF1(Hz/rpm)	Frequency reference in rpm. Frequency reference (Hz) if parameter *9904 MOTOR CTRL MODE* setting is *SCALAR: FREQ*.	1
	REF2(%)	%-reference	2
1102	EXT1/EXT2 SEL	Defines the source from which the drive reads the signal that selects between the two external control locations, EXT1 or EXT2.	*EXT1*

All parameters			
No.	**Name/Value**	**Description**	**Def/FbEq**
	EXT1	EXT1 active. The control signal sources are defined by parameters *1001 EXT1 COMMANDS* and *1103 REF1 SELECT*.	0
	DI1	Digital input DI1. 0 = EXT1, 1 = EXT2.	1
	DI2	See selection *DI1*.	2
	DI3	See selection *DI1*.	3
	DI4	See selection *DI1*.	4
	DI5	See selection *DI1*.	5
	EXT2	EXT2 active. The control signal sources are defined by parameters *1002 EXT2 COMMANDS* and *1106 REF2 SELECT*.	7
	COMM	Fieldbus interface as the source for EXT1/EXT2 selection, ie control word *0301 FB CMD WORD 1* bit 5 (with ABB drives profile *5319 EFB PAR 19* bit 11). The control word is sent by the fieldbus controller through the fieldbus adapter or embedded fieldbus (Modbus) to the drive. For the control word bits, see sections *DCU communication profile* on page *320* and *ABB drives communication profile* on page *315*.	8
	TIMED FUNC 1	Timed EXT1/EXT2 control selection. Timed function 1 active = EXT2, timed function 1 inactive = EXT1. See parameter group *36 TIMED FUNCTIONS*.	9
	TIMED FUNC 2	See selection *TIMED FUNC 1*.	10
	TIMED FUNC 3	See selection *TIMED FUNC 1*.	11
	TIMED FUNC 4	See selection *TIMED FUNC 1*.	12
	DI1(INV)	Inverted digital input DI1. 1 = EXT1, 0 = EXT2.	-1
	DI2(INV)	See selection *DI1(INV)*.	-2
	DI3(INV)	See selection *DI1(INV)*.	-3
	DI4(INV)	See selection *DI1(INV)*.	-4
	DI5(INV)	See selection *DI1(INV)*.	-5
1103	REF1 SELECT	Selects the signal source for external reference REF1. See section *Block diagram: Reference source for EXT1* on page *127*.	*AI1*
	KEYPAD	Control panel	0
	AI1	Analog input AI1	1
	AI2	Analog input AI2	2

All parameters			
No.	**Name/Value**	**Description**	**Def/FbEq**
	AI1/JOYST	Analog input AI1 as joystick. The minimum input signal runs the motor at the maximum reference in the reverse direction, the maximum input at the maximum reference in the forward direction. Minimum and maximum references are defined by parameters *1104 REF1 MIN* and *1105 REF1 MAX*. **Note:** Parameter *1003 DIRECTION* must be set to *REQUEST*. 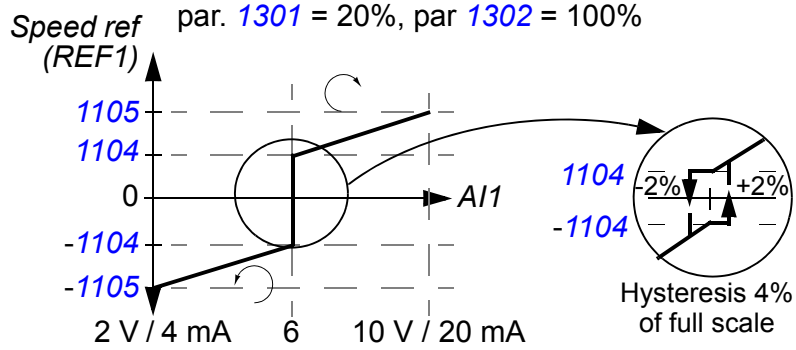 **WARNING!** If parameter *1301 MINIMUM AI1* is set to 0 V and analog input signal is lost (ie 0 V), the rotation of the motor is reversed to the maximum reference. Set the following parameters to activate a fault when analog input signal is lost: Set parameter *1301 MINIMUM AI1* to 20% (2 V or 4 mA). Set parameter *3021 AI1 FAULT LIMIT* to 5% or higher. Set parameter *3001 AI<MIN FUNCTION* to *FAULT*.	3
	AI2/JOYST	See selection *AI1/JOYST*.	4
	DI3U,4D(R)	Digital input DI3: Reference increase. Digital input DI4: Reference decrease. Stop command resets the reference to zero. Parameter *2205 ACCELER TIME 2* defines the rate of the reference change.	5
	DI3U,4D	Digital input DI3: Reference increase. Digital input DI4: Reference decrease. The program stores the active speed reference (not reset by a stop command). When the drive is restarted, the motor ramps up at the selected acceleration rate to the stored reference. Parameter *2205 ACCELER TIME 2* defines the rate of the reference change.	6
	COMM	Fieldbus reference REF1	8
	COMM+AI1	Summation of fieldbus reference REF1 and analog input AI. See section *Reference selection and correction* on page *308*.	9
	COMM*AI1	Multiplication of fieldbus reference REF1 and analog input AI1. See section *Reference selection and correction* on page *308*.	10

All parameters			
No.	**Name/Value**	**Description**	**Def/FbEq**
	DI3U,4D(RNC)	Digital input DI3: Reference increase. Digital input DI4: Reference decrease. Stop command resets the reference to zero. The reference is not saved if the control source is changed (from EXT1 to EXT2, from EXT2 to EXT1 or from LOC to REM). Parameter *2205 ACCELER TIME 2* defines the rate of the reference change.	11
	DI3U,4D(NC)	Digital input DI3: Reference increase. Digital input DI4: Reference decrease. The program stores the active speed reference (not reset by a stop command). The reference is not saved if the control source is changed (from EXT1 to EXT2, from EXT2 to EXT1 or from LOC to REM). When the drive is restarted, the motor ramps up at the selected acceleration rate to the stored reference. Parameter *2205 ACCELER TIME 2* defines the rate of the reference change.	12
	AI1+AI2	Reference is calculated with the following equation: REF = AI1(%) + AI2(%) - 50%	14
	AI1*AI2	Reference is calculated with the following equation: REF = AI1(%) · (AI2(%) / 50%)	15
	AI1-AI2	Reference is calculated with the following equation: REF = AI1(%) + 50% - AI2(%)	16
	AI1/AI2	Reference is calculated with the following equation: REF = AI1(%) · (50% / AI2 (%))	17
	KEYPAD(RNC)	Defines the control panel as the reference source. Stop command resets the reference to zero (the R stands for reset). The reference is not saved if the control source is changed (from EXT1 to EXT2, from EXT2 to EXT1).	20
	KEYPAD(NC)	Defines the control panel as the reference source. Stop command does not reset the reference to zero. The reference is stored. The reference is not saved if the control source is changed (from EXT1 to EXT2, from EXT2 to EXT1).	21
	DI4U,5D	See selection *DI3U,4D*.	30
	DI4U,5D(NC)	See selection *DI3U,4D(NC)*.	31
	FREQ INPUT	Frequency input	32
	SEQ PROG	Sequence programming output. See parameter *8420 ST1 REF SEL*.	33
	AI1+SEQ PROG	Addition of analog input AI1 and Sequence programming output	34
	AI2+SEQ PROG	Addition of analog input AI2 and Sequence programming output	35
1104	REF1 MIN	Defines the minimum value for external reference REF1. Corresponds to the minimum setting of the used source signal.	0.0 Hz / 1 rpm

All parameters			
No.	**Name/Value**	**Description**	**Def/FbEq**
	0.0…500.0 Hz / 0…30000 rpm	Minimum value in rpm. Hz if parameter *9904 MOTOR CTRL MODE* setting is *SCALAR: FREQ*. **Example:** Analog input AI1 is selected as the reference source (value of parameter *1103* is *AI1*). The reference minimum and maximum correspond to the *1301 MINIMUM AI1* and *1302 MAXIMUM AI1* settings as follows: 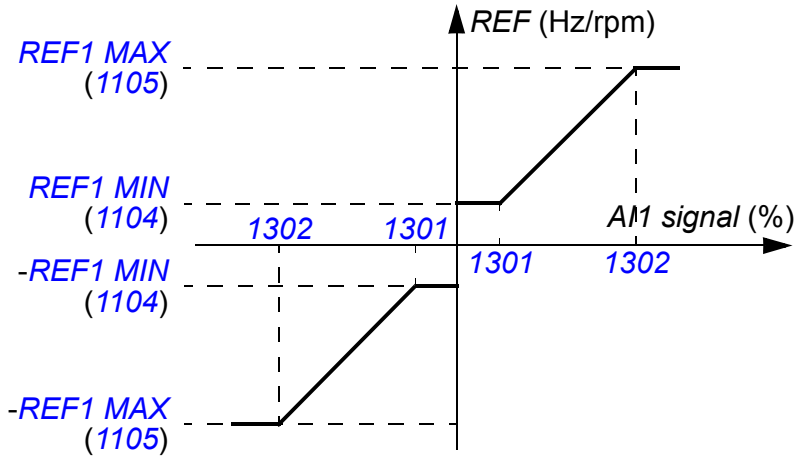 	1 = 0.1 Hz / 1 rpm
1105	REF1 MAX	Defines the maximum value for external reference REF1. Corresponds to the maximum setting of the used source signal.	E: 50.0 Hz U: 60.0 Hz
	0.0…500.0 Hz / 0…30000 rpm	Maximum value in rpm. Hz if parameter *9904 MOTOR CTRL MODE* setting is *SCALAR: FREQ*. See the example for parameter *1104 REF1 MIN*.	1 = 0.1 Hz / 1 rpm
1106	REF2 SELECT	Selects the signal source for external reference REF2.	*AI2*
	KEYPAD	See parameter *1103 REF1 SELECT*.	0
	AI1	See parameter *1103 REF1 SELECT*.	1
	AI2	See parameter *1103 REF1 SELECT*.	2
	AI1/JOYST	See parameter *1103 REF1 SELECT*.	3
	AI2/JOYST	See parameter *1103 REF1 SELECT*.	4
	DI3U,4D(R)	See parameter *1103 REF1 SELECT*.	5
	DI3U,4D	See parameter *1103 REF1 SELECT*.	6
	COMM	See parameter *1103 REF1 SELECT*.	8
	COMM+AI1	See parameter *1103 REF1 SELECT*.	9
	COMM*AI1	See parameter *1103 REF1 SELECT*.	10
	DI3U,4D(RNC)	See parameter *1103 REF1 SELECT*.	11
	DI3U,4D(NC)	See parameter *1103 REF1 SELECT*.	12
	AI1+AI2	See parameter *1103 REF1 SELECT*.	14
	AI1*AI2	See parameter *1103 REF1 SELECT*.	15
	AI1-AI2	See parameter *1103 REF1 SELECT*.	16
	AI1/AI2	See parameter *1103 REF1 SELECT*.	17
	PID1OUT	PID controller 1 output. See parameter groups *40 PROCESS PID SET 1* and *41 PROCESS PID SET 2*.	19

All parameters			
No.	**Name/Value**	**Description**	**Def/FbEq**
	KEYPAD(RNC)	See parameter *1103 REF1 SELECT*.	20
	KEYPAD(NC)	See parameter *1103 REF1 SELECT*.	21
	DI4U,5D	See parameter *1103 REF1 SELECT*.	30
	DI4U,5D(NC)	See parameter *1103 REF1 SELECT*.	31
	FREQ INPUT	See parameter *1103 REF1 SELECT*.	32
	SEQ PROG	See parameter *1103 REF1 SELECT*.	33
	AI1+SEQ PROG	See parameter *1103 REF1 SELECT*.	34
	AI2+SEQ PROG	See parameter *1103 REF1 SELECT*.	35
1107	REF2 MIN	Defines the minimum value for external reference REF2. Corresponds to the minimum setting of the used source signal.	0.0%
	0.0…100.0%	Value in percent of the maximum frequency / maximum speed / nominal torque. See the example for parameter *1104 REF1 MIN* for correspondence to the source signal limits.	1 = 0.1%
1108	REF2 MAX	Defines the maximum value for external reference REF2. Corresponds to the maximum setting of the used source signal.	100.0%
	0.0…100.0%	Value in percent of the maximum frequency / maximum speed / nominal torque. See the example for parameter *1104 REF1 MIN* for correspondence to the source signal limits.	1 = 0.1%
12 CONSTANT SPEEDS		Constant speed selection and values. See section *Constant speeds* on page *140*.	
1201	CONST SPEED SEL	Activates the constant speeds or selects the activation signal.	*DI3,4*
	NOT SEL	No constant speed in use	0
	DI1	Speed defined by parameter *1202 CONST SPEED 1* is activated through digital input DI1. 1 = active, 0 = inactive.	1
	DI2	Speed defined by parameter *1202 CONST SPEED 1* is activated through digital input DI2. 1 = active, 0 = inactive.	2
	DI3	Speed defined by parameter *1202 CONST SPEED 1* is activated through digital input DI3. 1 = active, 0 = inactive.	3
	DI4	Speed defined by parameter *1202 CONST SPEED 1* is activated through digital input DI4. 1 = active, 0 = inactive.	4
	DI5	Speed defined by parameter *1202 CONST SPEED 1* is activated through digital input DI5. 1 = active, 0 = inactive.	5

<table>
<tr><th colspan="3">All parameters</th></tr>
<tr><th>No.</th><th>Name/Value</th><th>Description</th><th>Def/FbEq</th></tr>
<tr><td></td><td>DI1,2</td><td>Constant speed selection through digital inputs DI1 and DI2.1 = DI active, 0 = DI inactive.<table><tr><th>DI1</th><th>DI2</th><th>Operation</th></tr><tr><td>0</td><td>0</td><td>No constant speed</td></tr><tr><td>1</td><td>0</td><td>Speed defined by par. 1202 CONST SPEED 1</td></tr><tr><td>0</td><td>1</td><td>Speed defined by par. 1203 CONST SPEED 2</td></tr><tr><td>1</td><td>1</td><td>Speed defined by par. 1204 CONST SPEED 3</td></tr></table></td><td>7</td></tr>
<tr><td></td><td>DI2,3</td><td>See selection DI1,2.</td><td>8</td></tr>
<tr><td></td><td>DI3,4</td><td>See selection DI1,2.</td><td>9</td></tr>
<tr><td></td><td>DI4,5</td><td>See selection DI1,2.</td><td>10</td></tr>
<tr><td></td><td>DI1,2,3</td><td>Constant speed selection through digital inputs DI1, DI2 and DI3. 1 = DI active, 0 = DI inactive.<table><tr><th>DI</th><th>DI2</th><th>DI3</th><th>Operation</th></tr><tr><td>0</td><td>0</td><td>0</td><td>No constant speed</td></tr><tr><td>1</td><td>0</td><td>0</td><td>Speed defined by par. 1202 CONST SPEED 1</td></tr><tr><td>0</td><td>1</td><td>0</td><td>Speed defined by par. 1203 CONST SPEED 2</td></tr><tr><td>1</td><td>1</td><td>0</td><td>Speed defined by par. 1204 CONST SPEED 3</td></tr><tr><td>0</td><td>0</td><td>1</td><td>Speed defined by par. 1205 CONST SPEED 4</td></tr><tr><td>1</td><td>0</td><td>1</td><td>Speed defined by par. 1206 CONST SPEED 5</td></tr><tr><td>0</td><td>1</td><td>1</td><td>Speed defined by par. 1207 CONST SPEED 6</td></tr><tr><td>1</td><td>1</td><td>1</td><td>Speed defined by par. 1208 CONST SPEED 7</td></tr></table></td><td>12</td></tr>
<tr><td></td><td>DI3,4,5</td><td>See selection DI1,2,3.</td><td>13</td></tr>
<tr><td></td><td>TIMED FUNC 1</td><td>External speed reference, speed defined by parameter 1202 CONST SPEED 1 or speed defined by parameter 1203 CONST SPEED 2 is used, depending on the selection of parameter 1209 TIMED MODE SEL and the state of timed function 1. See parameter group 36 TIMED FUNCTIONS.</td><td>15</td></tr>
<tr><td></td><td>TIMED FUNC 2</td><td>See selection TIMED FUNC 1.</td><td>16</td></tr>
<tr><td></td><td>TIMED FUNC 3</td><td>See selection TIMED FUNC 1.</td><td>17</td></tr>
<tr><td></td><td>TIMED FUNC 4</td><td>See selection TIMED FUNC 1.</td><td>18</td></tr>
<tr><td></td><td>TIMED FUN1&2</td><td>External speed reference or speed defined by parameter 1202 CONST SPEED 1 … 1205 CONST SPEED 4 is used, depending on the selection of parameter 1209 TIMED MODE SEL and the state of timed functions 1 and 2. See parameter group 36 TIMED FUNCTIONS.</td><td>19</td></tr>
<tr><td></td><td>DI1(INV)</td><td>Speed defined by parameter 1202 CONST SPEED 1 is activated through inverted digital input DI1. 0 = active, 1 = inactive.</td><td>-1</td></tr>
<tr><td></td><td>DI2(INV)</td><td>Speed defined by parameter 1202 CONST SPEED 1 is activated through inverted digital input DI2. 0 = active, 1 = inactive.</td><td>-2</td></tr>
</table>

<table>
<tr><th colspan="4">All parameters</th></tr>
<tr><th>No.</th><th>Name/Value</th><th>Description</th><th>Def/FbEq</th></tr>
<tr><td></td><td>DI3(INV)</td><td>Speed defined by parameter 1202 CONST SPEED 1 is activated through inverted digital input DI3. 0 = active, 1 = inactive.</td><td>-3</td></tr>
<tr><td></td><td>DI4(INV)</td><td>Speed defined by parameter 1202 CONST SPEED 1 is activated through inverted digital input DI4. 0 = active, 1 = inactive.</td><td>-4</td></tr>
<tr><td></td><td>DI5(INV)</td><td>Speed defined by parameter 1202 CONST SPEED 1 is activated through inverted digital input DI5. 0 = active, 1 = inactive.</td><td>-5</td></tr>
<tr><td></td><td>DI1,2(INV)</td><td>Constant speed selection through inverted digital inputs DI1 and DI2. 1 = DI active, 0 = DI inactive.
<table><tr><th>DI1</th><th>DI2</th><th>Operation</th></tr><tr><td>1</td><td>1</td><td>No constant speed</td></tr><tr><td>0</td><td>1</td><td>Speed defined by par. 1202 CONST SPEED 1</td></tr><tr><td>1</td><td>0</td><td>Speed defined by par. 1203 CONST SPEED 2</td></tr><tr><td>0</td><td>0</td><td>Speed defined by par. 1204 CONST SPEED 3</td></tr></table></td><td>-7</td></tr>
<tr><td></td><td>DI2,3(INV)</td><td>See selection DI1,2(INV).</td><td>-8</td></tr>
<tr><td></td><td>DI3,4(INV)</td><td>See selection DI1,2(INV).</td><td>-9</td></tr>
<tr><td></td><td>DI4,5(INV)</td><td>See selection DI1,2(INV).</td><td>-10</td></tr>
<tr><td></td><td>DI1,2,3(INV)</td><td>Constant speed selection through inverted digital inputs DI1, DI2 and DI3. 1 = DI active, 0 = DI inactive.
<table><tr><th>DI</th><th>DI2</th><th>DI3</th><th>Operation</th></tr><tr><td>1</td><td>1</td><td>1</td><td>No constant speed</td></tr><tr><td>0</td><td>1</td><td>1</td><td>Speed defined by par. 1202 CONST SPEED 1</td></tr><tr><td>1</td><td>0</td><td>1</td><td>Speed defined by par. 1203 CONST SPEED 2</td></tr><tr><td>0</td><td>0</td><td>1</td><td>Speed defined by par. 1204 CONST SPEED 3</td></tr><tr><td>1</td><td>1</td><td>0</td><td>Speed defined by par. 1205 CONST SPEED 4</td></tr><tr><td>0</td><td>1</td><td>0</td><td>Speed defined by par. 1206 CONST SPEED 5</td></tr><tr><td>1</td><td>0</td><td>0</td><td>Speed defined by par. 1207 CONST SPEED 6</td></tr><tr><td>0</td><td>0</td><td>0</td><td>Speed defined by par. 1208 CONST SPEED 7</td></tr></table></td><td>-12</td></tr>
<tr><td></td><td>DI3,4,5(INV)</td><td>See selection DI1,2,3(INV).</td><td>-13</td></tr>
<tr><td>1202</td><td>CONST SPEED 1</td><td>Defines constant speed (or drive output frequency) 1.</td><td>E: 5.0 Hz
U: 6.0 Hz</td></tr>
<tr><td></td><td>0.0…500.0 Hz</td><td>Speed in rpm. Output frequency in Hz if parameter 9904 MOTOR CTRL MODE setting is SCALAR: FREQ.</td><td>1 = 0.1 Hz / 1 rpm</td></tr>
<tr><td>1203</td><td>CONST SPEED 2</td><td>Defines constant speed (or drive output frequency) 2.</td><td>E: 10.0 Hz
U: 12.0 Hz</td></tr>
<tr><td></td><td>0.0…500.0 Hz / 0…30000 rpm</td><td>Speed in rpm. Output frequency in Hz if parameter 9904 MOTOR CTRL MODE setting is SCALAR: FREQ.</td><td>1 = 0.1 Hz / 1 rpm</td></tr>
<tr><td>1204</td><td>CONST SPEED 3</td><td>Defines constant speed (or drive output frequency) 3.</td><td>E: 15.0 Hz
U: 18.0 Hz</td></tr>
<tr><td></td><td>0.0…500.0 Hz / 0…30000 rpm</td><td>Speed in rpm. Output frequency in Hz if parameter 9904 MOTOR CTRL MODE setting is SCALAR: FREQ.</td><td>1 = 0.1 Hz / 1 rpm</td></tr>
</table>

All parameters			
No.	**Name/Value**	**Description**	**Def/FbEq**
1205	CONST SPEED 4	Defines constant speed (or drive output frequency) 4.	E: 20.0 Hz U: 24.0 Hz
	0.0…500.0 Hz / 0…30000 rpm	Speed in rpm. Output frequency in Hz if parameter *9904 MOTOR CTRL MODE* setting is *SCALAR: FREQ*.	1 = 0.1 Hz / 1 rpm
1206	CONST SPEED 5	Defines constant speed (or drive output frequency) 5.	E: 25.0 Hz U: 30.0 Hz
	0.0…500.0 Hz / 0…30000 rpm	Speed in rpm. Output frequency in Hz if parameter *9904 MOTOR CTRL MODE* setting is *SCALAR: FREQ*.	1 = 0.1 Hz / 1 rpm
1207	CONST SPEED 6	Defines constant speed (or drive output frequency) 6.	E: 40.0 Hz U: 48.0 Hz
	0.0…500.0 Hz / 0…30000 rpm	Speed in rpm. Output frequency in Hz if parameter *9904 MOTOR CTRL MODE* setting is *SCALAR: FREQ*. Constant speed 6 is used also as jogging speed. See section *Control of a mechanical brake* on page *157*.	1 = 0.1 Hz / 1 rpm
1208	CONST SPEED 7	Defines constant speed (or drive output frequency) 7. Constant speed 7 is used also as jogging speed (see section *Control of a mechanical brake* on page *157*) or with fault functions (*3001 AI<MIN FUNCTION* and *3002 PANEL COMM ERR*).	E: 50.0 Hz U: 60.0 Hz
	0.0…500.0 Hz / 0…30000 rpm	Speed in rpm. Output frequency in Hz if parameter *9904 MOTOR CTRL MODE* setting is *SCALAR: FREQ*. Constant speed 7 is used also as jogging speed. See section *Control of a mechanical brake* on page *157*.	1 = 0.1 Hz / 1 rpm

<table>
<tr><th colspan="4">All parameters</th></tr>
<tr><th>No.</th><th>Name/Value</th><th>Description</th><th>Def/FbEq</th></tr>
<tr><td>1209</td><td>TIMED MODE SEL</td><td>Selects timed function activated speed. Timed function can be used to change between the external reference and constant speeds when parameter 1201 CONST SPEED SEL selection is TIMED FUNC 1 … TIMED FUNC 4 or TIMED FUN1&2.</td><td>CS1/2/3/4</td></tr>
<tr><td></td><td>EXT/CS1/2/3</td><td>When parameter 1201 CONST SPEED SEL = TIMED FUNC 1 … TIMED FUNC 4, this timed function selects an external speed reference or constant speed. 1 = timed function active, 0 = timed function inactive.
<table>
<tr><th>Timed function 1…4</th><th>Operation</th></tr>
<tr><td>0</td><td>External reference</td></tr>
<tr><td>1</td><td>Speed defined by par. 1202 CONST SPEED 1</td></tr>
</table>
When parameter 1201 CONST SPEED SEL = TIMED FUN1&2, timed functions 1 and 2 select an external speed reference or constant speed. 1 = timed function active, 0 = timed function inactive.
<table>
<tr><th>Timed function 1</th><th>Timed function 2</th><th>Operation</th></tr>
<tr><td>0</td><td>0</td><td>External reference</td></tr>
<tr><td>1</td><td>0</td><td>Speed defined by par. 1202 CONST SPEED 1</td></tr>
<tr><td>0</td><td>1</td><td>Speed defined by par. 1203 CONST SPEED 2</td></tr>
<tr><td>1</td><td>1</td><td>Speed defined by par. 1204 CONST SPEED 3</td></tr>
</table></td><td>1</td></tr>
</table>

<table>
<tr><th colspan="3">All parameters</th></tr>
<tr><th>No.</th><th>Name/Value</th><th>Description</th><th>Def/FbEq</th></tr>
<tr><td></td><td>CS1/2/3/4</td><td>When parameter 1201 CONST SPEED SEL = TIMED FUNC 1 … TIMED FUNC 4, this timed function selects a constant speed. 1 = timed function active, 0 = timed function inactive.
<table><tr><th>Timed function 1…4</th><th>Operation</th></tr><tr><td>0</td><td>Speed defined by parameter 1202 CONST SPEED 1</td></tr><tr><td>1</td><td>Speed defined by parameter 1203 CONST SPEED 2</td></tr></table>When parameter 1201 CONST SPEED SEL = TIMED FUN1&2, timed functions 1 and 2 select a constant speed. 1 = timed function active, 0 = timed function inactive.
<table><tr><th>Timed function 1</th><th>Timed function 2</th><th>Operation</th></tr><tr><td>0</td><td>0</td><td>Speed defined by parameter 1202 CONST SPEED 1</td></tr><tr><td>1</td><td>0</td><td>Speed defined by parameter 1203 CONST SPEED 2</td></tr><tr><td>0</td><td>1</td><td>Speed defined by parameter 1204 CONST SPEED 3</td></tr><tr><td>1</td><td>1</td><td>Speed defined by parameter 1205 CONST SPEED 4</td></tr></table></td><td>2</td></tr>
<tr><td>13 ANALOG INPUTS</td><td></td><td>Analog input signal processing</td><td></td></tr>
<tr><td>1301</td><td>MINIMUM AI1</td><td>Defines the minimum %-value that corresponds to minimum mA/(V) signal for analog input AI1. When used as a reference, the value corresponds to the reference minimum setting.
0…20 mA ≙ 0…100%
4…20 mA ≙ 20…100%
-10…10 mA ≙ -50…50%
Example: If AI1 is selected as the source for external reference REF1, this value corresponds to the value of parameter 1104 REF1 MIN.
Note: MINIMUM AI1 value must not exceed MAXIMUM AI1 value.</td><td>1.0%</td></tr>
<tr><td></td><td>-100.0…100.0%</td><td>Value in percent of the full signal range.
Example: If the minimum value for analog input is 4 mA, the percent value for 0…20 mA range is:
(4 mA / 20 mA) · 100% = 20%</td><td>1 = 0.1%</td></tr>
</table>

All parameters			
No.	**Name/Value**	**Description**	**Def/FbEq**
1302	MAXIMUM AI1	Defines the maximum %-value that corresponds to maximum mA/(V) signal for analog input AI1. When used as a reference, the value corresponds to the reference maximum setting. 0…20 mA ≙ 0…100% 4…20 mA ≙ 20…100% -10…10 mA ≙ -50…50% **Example:** If AI1 is selected as the source for external reference REF1, this value corresponds to the value of parameter *1105 REF1 MAX*.	100.0%
	-100.0…100.0%	Value in percent of the full signal range. **Example:** If the maximum value for analog input is 10 mA, the percent value for 0…20 mA range is: (10 mA / 20 mA) · 100% = 50%	1 = 0.1%
1303	FILTER AI1	Defines the filter time constant for analog input AI1, ie the time within which 63% of a step change is reached. 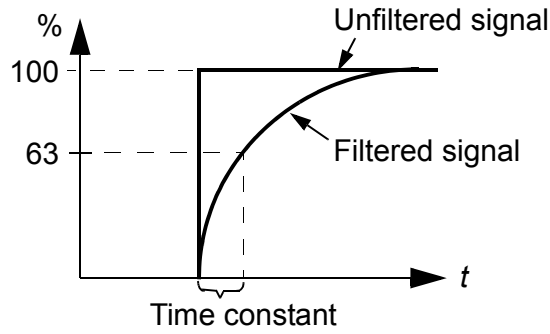	0.1 s
	0.0…10.0 s	Filter time constant	1 = 0.1 s
1304	MINIMUM AI2	Defines the minimum %-value that corresponds to minimum mA/(V) signal for analog input AI2. See parameter *1301 MINIMUM AI1*.	1.0%
	-100.0…100.0%	See parameter *1301 MINIMUM AI1*.	1 = 0.1%
1305	MAXIMUM AI2	Defines the maximum %-value that corresponds to maximum mA/(V) signal for analog input AI2. See parameter *1302 MAXIMUM AI1*.	100.0%
	-100.0…100.0%	See parameter *1302 MAXIMUM AI1*.	1 = 0.1%
1306	FILTER AI2	Defines the filter time constant for analog input AI2. See parameter *1303 FILTER AI1*.	0.1 s
	0.0…10.0 s	Filter time constant	1 = 0.1 s

All parameters			
No.	**Name/Value**	**Description**	**Def/FbEq**
14 RELAY OUTPUTS		Status information indicated through relay output, and relay operating delays. **Note:** Relay outputs 2…4 are available only if the MREL-01 relay output extension module is connected to the drive. See *MREL-01 relay output extension module user's manual* (3AUA0000035974 [English]).	
1401	RELAY OUTPUT 1	Selects a drive status indicated through relay output RO 1. The relay energizes when the status meets the setting.	*FAULT(-1)*
	NOT SEL	Not used	0
	READY	Ready to function: Run enable signal on, no fault, supply voltage within acceptable range and emergency stop signal off.	1
	RUN	Running: Start signal on, Run enable signal on, no active fault.	2
	FAULT(-1)	Inverted fault. Relay is de-energized on a fault trip.	3
	FAULT	Fault	4
	ALARM	Alarm	5
	REVERSED	Motor rotates in reverse direction.	6
	STARTED	The drive has received start command. Relay is energized even if Run enable signal is off. Relay is de-energized when drive receives a stop command or a fault occurs.	7
	SUPRV1 OVER	Status according to supervision parameters *3201*…*3203*. See parameter group *32 SUPERVISION*.	8
	SUPRV1 UNDER	See selection *SUPRV1 OVER*.	9
	SUPRV2 OVER	Status according to supervision parameters *3204*…*3206*. See parameter group *32 SUPERVISION*.	10
	SUPRV2 UNDER	See selection *SUPRV2 OVER*.	11
	SUPRV3 OVER	Status according to supervision parameters *3207*…*3209*. See parameter group *32 SUPERVISION*.	12
	SUPRV3 UNDER	See selection *SUPRV3 OVER*.	13
	AT SET POINT	Output frequency is equal to the reference frequency.	14
	FAULT(RST)	Fault. Automatic reset after the autoreset delay. See parameter group *31 AUTOMATIC RESET*.	15
	FLT/ALARM	Fault or alarm	16
	EXT CTRL	Drive is under external control.	17
	REF 2 SEL	External reference REF 2 is in use.	18
	CONST FREQ	A constant speed is in use. See parameter group *12 CONSTANT SPEEDS*.	19
	REF LOSS	Reference or active control location is lost.	20
	OVERCURRENT	Alarm/Fault by overcurrent protection function	21

<table>
<tr><th colspan="4">All parameters</th></tr>
<tr><th>No.</th><th>Name/Value</th><th>Description</th><th>Def/FbEq</th></tr>
<tr><td></td><td>OVERVOLTAGE</td><td>Alarm/Fault by overvoltage protection function</td><td>22</td></tr>
<tr><td></td><td>DRIVE TEMP</td><td>Alarm/Fault by drive overtemperature protection function</td><td>23</td></tr>
<tr><td></td><td>UNDERVOLTAGE</td><td>Alarm/Fault by undervoltage protection function</td><td>24</td></tr>
<tr><td></td><td>AI1 LOSS</td><td>Analog input AI1 signal is lost.</td><td>25</td></tr>
<tr><td></td><td>AI2 LOSS</td><td>Analog input AI2 signal is lost.</td><td>26</td></tr>
<tr><td></td><td>MOTOR TEMP</td><td>Alarm/Fault by motor overtemperature protection function. See parameter 3005 MOT THERM PROT.</td><td>27</td></tr>
<tr><td></td><td>STALL</td><td>Alarm/Fault by stall protection function. See parameter 3010 STALL FUNCTION.</td><td>28</td></tr>
<tr><td></td><td>UNDERLOAD</td><td>Alarm/Fault by underload protection function. See parameter 3013 UNDERLOAD FUNC.</td><td>29</td></tr>
<tr><td></td><td>PID SLEEP</td><td>PID sleep function. See parameter group 40 PROCESS PID SET 1 / 41 PROCESS PID SET 2.</td><td>30</td></tr>
<tr><td></td><td>FLUX READY</td><td>Motor is magnetized and able to supply nominal torque.</td><td>33</td></tr>
<tr><td></td><td>USER MACRO 2</td><td>User macro 2 is active.</td><td>34</td></tr>
<tr><td></td><td>COMM</td><td>Fieldbus control signal 0134 COMM RO WORD. 0 = de-energize output, 1 = energize output.
<table>
<tr><th>0134 value</th><th>Binary</th><th>RO4 (MREL)</th><th>RO3 (MREL)</th><th>RO2 (MREL)</th><th>DO</th><th>RO1</th></tr>
<tr><td>0</td><td>00000</td><td>0</td><td>0</td><td>0</td><td>0</td><td>0</td></tr>
<tr><td>1</td><td>00001</td><td>0</td><td>0</td><td>0</td><td>0</td><td>1</td></tr>
<tr><td>2</td><td>00010</td><td>0</td><td>0</td><td>0</td><td>1</td><td>0</td></tr>
<tr><td>3</td><td>00011</td><td>0</td><td>0</td><td>0</td><td>1</td><td>1</td></tr>
<tr><td>4</td><td>00100</td><td>0</td><td>0</td><td>1</td><td>0</td><td>0</td></tr>
<tr><td>5…30</td><td>…</td><td>…</td><td>…</td><td>…</td><td>…</td><td>…</td></tr>
<tr><td>31</td><td>11111</td><td>1</td><td>1</td><td>1</td><td>1</td><td>1</td></tr>
</table></td><td>35</td></tr>
<tr><td></td><td>COMM(-1)</td><td>Fieldbus control signal 0134 COMM RO WORD. 0 = de-energize output, 1 = energize output.
<table>
<tr><th>0134 value</th><th>Binary</th><th>RO4 (MREL)</th><th>RO3 (MREL)</th><th>RO2 (MREL)</th><th>DO</th><th>RO1</th></tr>
<tr><td>0</td><td>00000</td><td>1</td><td>1</td><td>1</td><td>1</td><td>1</td></tr>
<tr><td>1</td><td>00001</td><td>1</td><td>1</td><td>1</td><td>1</td><td>0</td></tr>
<tr><td>2</td><td>00010</td><td>1</td><td>1</td><td>1</td><td>0</td><td>1</td></tr>
<tr><td>3</td><td>00011</td><td>1</td><td>1</td><td>1</td><td>0</td><td>0</td></tr>
<tr><td>4</td><td>00100</td><td>1</td><td>1</td><td>0</td><td>1</td><td>1</td></tr>
<tr><td>5…30</td><td>…</td><td>…</td><td>…</td><td>…</td><td>…</td><td>…</td></tr>
<tr><td>31</td><td>11111</td><td>0</td><td>0</td><td>0</td><td>0</td><td>0</td></tr>
</table></td><td>36</td></tr>
<tr><td></td><td>TIMED FUNC 1</td><td>Timed function 1 is active. See parameter group 36 TIMED FUNCTIONS.</td><td>37</td></tr>
<tr><td></td><td>TIMED FUNC 2</td><td>Timed function 2 is active. See parameter group 36 TIMED FUNCTIONS.</td><td>38</td></tr>
</table>

All parameters			
No.	**Name/Value**	**Description**	**Def/FbEq**
	TIMED FUNC 3	Timed function 3 is active. See parameter group *36 TIMED FUNCTIONS*.	39
	TIMED FUNC 4	Timed function 4 is active. See parameter group *36 TIMED FUNCTIONS*.	40
	M.TRIG FAN	Cooling fan running time counter is triggered. See parameter group *29 MAINTENANCE TRIG*.	41
	M.TRIG REV	Revolutions counter is triggered. See parameter group *29 MAINTENANCE TRIG*.	42
	M.TRIG RUN	Run time counter is triggered. See parameter group *29 MAINTENANCE TRIG*.	43
	M.TRIG MWH	MWh counter is triggered. See parameter group *29 MAINTENANCE TRIG*.	44
	SEQ PROG	Relay output control with Sequence programming. See parameter *8423 ST1 OUT CONTROL*.	50
	MBRK	On/Off control of a mechanical brake. See parameter group *43 MECH BRK CONTROL*.	51
	JOG ACTIVE	Jogging function active. See parameter *1010 JOGGING SEL*.	52
	STO	STO (Safe torque off) has been triggered.	57
	STO(-1)	STO (Safe torque off) is inactive and the drive operates normally.	58
1402	RELAY OUTPUT 2	See parameter *1401 RELAY OUTPUT 1*. Available only if the MREL-01 relay output extension module is connected to the drive.	*NOT SEL*
1403	RELAY OUTPUT 3	See parameter *1401 RELAY OUTPUT 1*. Available only if the MREL-01 relay output extension module is connected to the drive.	*NOT SEL*
1404	RO 1 ON DELAY	Defines the operation delay for relay output RO 1.	0.0 s
	0.0…3600.0 s	Delay time. The figure below illustrates the operation (on) and release (off) delays for relay output RO. 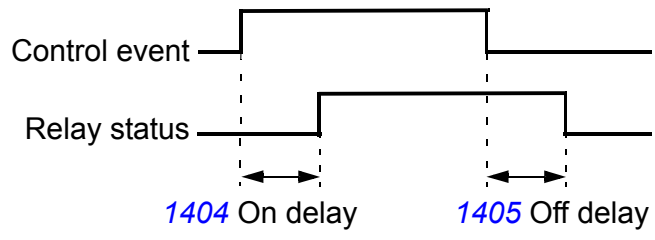 	1 = 0.1 s
1405	RO 1 OFF DELAY	Defines the release delay for relay output RO 1.	0.0 s
	0.0…3600.0 s	Delay time. See the figure for parameter *1404 RO 1 ON DELAY*.	1 = 0.1 s

All parameters			
No.	**Name/Value**	**Description**	**Def/FbEq**
1406	RO 2 ON DELAY	See parameter *1404 RO 1 ON DELAY*.	0.0 s
1407	RO 2 OFF DELAY	See parameter *1405 RO 1 OFF DELAY*.	0.0 s
1408	RO 3 ON DELAY	See parameter *1404 RO 1 ON DELAY*.	0.0 s
1409	RO 3 OFF DELAY	See parameter *1405 RO 1 OFF DELAY*.	0.0 s
1410	RELAY OUTPUT 4	See parameter *1401 RELAY OUTPUT 1*. Available only if the MREL-01 relay output extension module is connected to the drive.	*NOT SEL*
1413	RO 4 ON DELAY	See parameter *1404 RO 1 ON DELAY*.	0.0 s
1414	RO 4 OFF DELAY	See parameter *1405 RO 1 OFF DELAY*.	0.0 s
15 ANALOG OUTPUTS		Selection of the actual signals to be indicated through analog output and output signal processing.	
1501	AO1 CONTENT SEL	Connects a drive signal to analog output AO.	103
	x…x	Parameter index in group *01 OPERATING DATA*. Eg 102 = *0102 SPEED*.	
1502	AO1 CONTENT MIN	Defines the minimum value for the signal selected with parameter *1501 AO1 CONTENT SEL*. AO minimum and maximum correspond to the *1504 MINIMUM AO1* and *1505 MAXIMUM AO1* settings as follows: 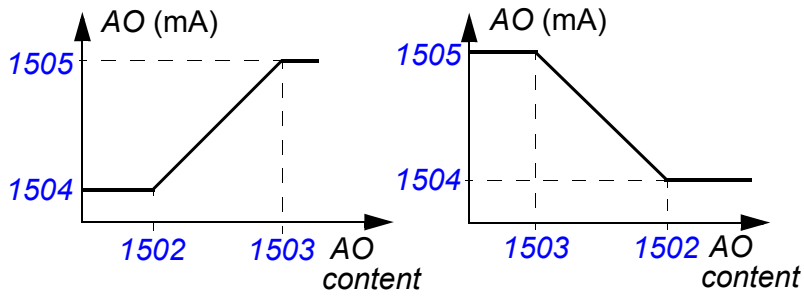	-
	x…x	Setting range depends on the parameter *1501 AO1 CONTENT SEL* setting.	-
1503	AO1 CONTENT MAX	Defines the maximum value for the signal selected with parameter *1501 AO1 CONTENT SEL*. See the figure for parameter *1502 AO1 CONTENT MIN*.	-
	x…x	Setting range depends on the parameter *1501 AO1 CONTENT SEL* setting.	-
1504	MINIMUM AO1	Defines the minimum value for the analog output signal AO. See the figure for parameter *1502 AO1 CONTENT MIN*.	0.0 mA
	0.0…20.0 mA	Minimum value	1 = 0.1 mA

All parameters			
No.	**Name/Value**	**Description**	**Def/FbEq**
1505	MAXIMUM AO1	Defines the maximum value for the analog output signal AO. See the figure for parameter *1502 AO1 CONTENT MIN*.	20.0 mA
	0.0…20.0 mA	Maximum value	1 = 0.1 mA
1506	FILTER AO1	Defines the filter time constant for analog output AO, ie the time within which 63% of a step change is reached. See the figure for parameter *1303 FILTER AI1*.	0.1 s
	0.0…10.0 s	Filter time constant	1 = 0.1 s
16 SYSTEM CONTROLS		Parameter view, Run enable, parameter lock etc.	
1601	RUN ENABLE	Selects a source for the external Run enable signal.	*NOT SEL*
	NOT SEL	Allows the drive to start without an external Run enable signal.	0
	DI1	External signal required through digital input DI1. 1 = Run enable. If Run enable signal is switched off, the drive will not start or coasts to stop if it is running.	1
	DI2	See selection *DI1*.	2
	DI3	See selection *DI1*.	3
	DI4	See selection *DI1*.	4
	DI5	See selection *DI1*.	5
	COMM	Fieldbus interface as the source for inverted Run enable signal (Run disable), ie control word *0301 FB CMD WORD 1* bit 6 (with ABB drives profile *5319 EFB PAR 19* bit 3). The control word is sent by the fieldbus controller through the fieldbus adapter or embedded fieldbus (Modbus) to the drive. For the control word bits, see sections *DCU communication profile* on page *320* and *ABB drives communication profile* on page *315*.	7
	DI1(INV)	External signal required through inverted digital input DI1. 0 = Run enable. If Run enable signal is switched on, the drive will not start or coasts to stop if it is running.	-1
	DI2(INV)	See selection *DI1(INV)*.	-2
	DI3(INV)	See selection *DI1(INV)*.	-3
	DI4(INV)	See selection *DI1(INV)*.	-4
	DI5(INV)	See selection *DI1(INV)*.	-5
1602	PARAMETER LOCK	Selects the state of the parameter lock. The lock prevents parameter changing from the control panel.	*OPEN*
	LOCKED	Parameter values cannot be changed from the control panel. The lock can be opened by entering the valid code to parameter *1603 PASS CODE*. The lock does not prevent parameter changes made by macros or fieldbus.	0
	OPEN	The lock is open. Parameter values can be changed.	1

All parameters			
No.	**Name/Value**	**Description**	**Def/FbEq**
	NOT SAVED	Parameter changes from the control panel are not stored into the permanent memory. To store changed parameter values, set parameter *1607 PARAM SAVE* value to *SAVE…*.	2
1603	PASS CODE	Selects the pass code for the parameter lock (see parameter *1602 PARAMETER LOCK*).	0
	0…65535	Pass code. Setting 358 opens the lock. The value reverts back to 0 automatically.	1 = 1
1604	FAULT RESET SEL	Selects the source for the fault reset signal. The signal resets the drive after a fault trip if the cause of the fault no longer exists.	*KEYPAD*
	KEYPAD	Fault reset only from the control panel	0
	DI1	Reset through digital input DI1 (reset on the rising edge of DI1) or from the control panel	1
	DI2	See selection *DI1*.	2
	DI3	See selection *DI1*.	3
	DI4	See selection *DI1*.	4
	DI5	See selection *DI1*.	5
	START/STOP	Reset along with the stop signal received through a digital input, or from the control panel. **Note:** Do not use this option when start, stop and direction commands are received through fieldbus communication.	7
	COMM	Fieldbus interface as the source for the fault reset signal, ie control word *0301 FB CMD WORD 1* bit 4 (with ABB drives profile *5319 EFB PAR 19* bit 7). The control word is sent by the fieldbus controller through the fieldbus adapter or embedded fieldbus (Modbus) to the drive. For the control word bits, see sections *DCU communication profile* on page *320* and *ABB drives communication profile* on page *315*.	8
	DI1(INV)	Reset through inverted digital input DI1 (reset on the falling edge of DI1) or from the control panel	-1
	DI2(INV)	See selection *DI1(INV)*.	-2
	DI3(INV)	See selection *DI1(INV)*.	-3
	DI4(INV)	See selection *DI1(INV)*.	-4
	DI5(INV)	See selection *DI1(INV)*.	-5

<table>
<tr><th colspan="3">All parameters</th></tr>
<tr><th>No.</th><th>Name/Value</th><th>Description</th><th>Def/FbEq</th></tr>
<tr><td>1605</td><td>USER PAR SET CHG</td><td>Enables the change of the User parameter set through a digital input. See parameter 9902 APPLIC MACRO. The change is only allowed when the drive is stopped. During the change, the drive will not start.
Note: Always save the User parameter set with parameter 9902 after changing any parameter setting, or reperforming the motor identification. The last settings saved by the user are loaded into use whenever the power is switched off and on again or the parameter 9902 setting is changed. Any unsaved changes will be lost.
Note: The value of this parameter is not included in the User parameter sets. A setting once made remains despite User parameter set change.
Note: Selection of User parameter set 2 can be supervised through relay outputs RO 1…4 and digital output DO. See parameters 1401 RELAY OUTPUT 1 … 1403 RELAY OUTPUT 3, 1410 RELAY OUTPUT 4 and 1805 DO SIGNAL.</td><td>NOT SEL</td></tr>
<tr><td></td><td>NOT SEL</td><td>User parameter set change is not possible through a digital input. Parameter sets can be changed only from the control panel.</td><td>0</td></tr>
<tr><td></td><td>DI1</td><td>User parameter set control through digital input DI1. Falling edge of digital input DI1: User parameter set 1 is loaded into use. Rising edge of digital input DI1: User parameter set 2 is loaded into use.</td><td>1</td></tr>
<tr><td></td><td>DI2</td><td>See selection DI1.</td><td>2</td></tr>
<tr><td></td><td>DI3</td><td>See selection DI1.</td><td>3</td></tr>
<tr><td></td><td>DI4</td><td>See selection DI1.</td><td>4</td></tr>
<tr><td></td><td>DI5</td><td>See selection DI1.</td><td>5</td></tr>
<tr><td></td><td>DI1,2</td><td>User parameter set selection through digital inputs DI1 and DI2. 1 = DI active, 0 = DI inactive.
<table><tr><th>DI1</th><th>DI2</th><th>User parameter set</th></tr><tr><td>0</td><td>0</td><td>User parameter set 1</td></tr><tr><td>1</td><td>0</td><td>User parameter set 2</td></tr><tr><td>0</td><td>1</td><td>User parameter set 3</td></tr></table></td><td>7</td></tr>
<tr><td></td><td>DI2,3</td><td>See selection DI1,2.</td><td>8</td></tr>
<tr><td></td><td>DI3,4</td><td>See selection DI1,2.</td><td>9</td></tr>
<tr><td></td><td>DI4,5</td><td>See selection DI1,2.</td><td>10</td></tr>
<tr><td></td><td>DI1(INV)</td><td>User parameter set control through inverted digital input DI1. Falling edge of inverted digital input DI1: User parameter set 2 is loaded into use. Rising edge of inverted digital input DI1: User parameter set 1 is loaded into use.</td><td>-1</td></tr>
<tr><td></td><td>DI2(INV)</td><td>See selection DI1(INV).</td><td>-2</td></tr>
<tr><td></td><td>DI3(INV)</td><td>See selection DI1(INV).</td><td>-3</td></tr>
</table>

<table>
<tr><th colspan="4">All parameters</th></tr>
<tr><th>No.</th><th>Name/Value</th><th>Description</th><th>Def/FbEq</th></tr>
<tr><td></td><td>DI4(INV)</td><td>See selection DI1(INV).</td><td>-4</td></tr>
<tr><td></td><td>DI1,2(INV)</td><td>User parameter set selection through inverted digital inputs DI1 and DI2. 1 = DI inactive, 0 =DI active.<table><tr><th>DI1</th><th>DI2</th><th>User parameter set</th></tr><tr><td>1</td><td>1</td><td>User parameter set 1</td></tr><tr><td>0</td><td>1</td><td>User parameter set 2</td></tr><tr><td>1</td><td>0</td><td>User parameter set 3</td></tr></table></td><td>-7</td></tr>
<tr><td></td><td>DI2,3(INV)</td><td>See selection DI1,2.</td><td>-8</td></tr>
<tr><td></td><td>DI3,4(INV)</td><td>See selection DI1,2.</td><td>-9</td></tr>
<tr><td></td><td>DI4,5(INV)</td><td>See selection DI1,2.</td><td>-10</td></tr>
<tr><td>1606</td><td>LOCAL LOCK</td><td>Disables entering local control mode or selects the source for the local control mode lock signal. When local lock is active, entering the local control mode is disabled (LOC/REM key of the panel).</td><td>NOT SEL</td></tr>
<tr><td></td><td>NOT SEL</td><td>Local control is allowed.</td><td>0</td></tr>
<tr><td></td><td>DI1</td><td>Local control mode lock signal through digital input DI1. Rising edge of digital input DI1: Local control disabled. Falling edge of digital input DI1: Local control allowed.</td><td>1</td></tr>
<tr><td></td><td>DI2</td><td>See selection DI1.</td><td>2</td></tr>
<tr><td></td><td>DI3</td><td>See selection DI1.</td><td>3</td></tr>
<tr><td></td><td>DI4</td><td>See selection DI1.</td><td>4</td></tr>
<tr><td></td><td>DI5</td><td>See selection DI1.</td><td>5</td></tr>
<tr><td></td><td>ON</td><td>Local control is disabled.</td><td>7</td></tr>
<tr><td></td><td>COMM</td><td>Fieldbus interface as the source for the local lock, ie control word 0301 FB CMD WORD 1 bit 14. The control word is sent by the fieldbus controller through the fieldbus adapter or embedded fieldbus (Modbus) to the drive. For the control word bits, see section DCU communication profile on page 320.
Note: This setting applies only for the DCU profile.</td><td>8</td></tr>
<tr><td></td><td>DI1(INV)</td><td>Local lock through inverted digital input DI1. Rising edge of inverted digital input DI1: Local control allowed. Falling edge of inverted digital input DI1: Local control disabled.</td><td>-1</td></tr>
<tr><td></td><td>DI2(INV)</td><td>See selection DI1(INV).</td><td>-2</td></tr>
<tr><td></td><td>DI3(INV)</td><td>See selection DI1(INV).</td><td>-3</td></tr>
<tr><td></td><td>DI4(INV)</td><td>See selection DI1(INV).</td><td>-4</td></tr>
<tr><td></td><td>DI5(INV)</td><td>See selection DI1(INV).</td><td>-5</td></tr>
<tr><td>1607</td><td>PARAM SAVE</td><td>Saves the valid parameter values to the permanent memory.
Note: A new parameter value of a standard macro is saved automatically when changed from the panel but not when altered through a fieldbus connection.</td><td>DONE</td></tr>
<tr><td></td><td>DONE</td><td>Saving completed</td><td>0</td></tr>
</table>

All parameters			
No.	**Name/Value**	**Description**	**Def/FbEq**
	SAVE…	Saving in progress	1
1608	START ENABLE 1	Selects the source for the Start enable 1 signal. **Note:** Functionality of the Start enable signal is different from the Run enable signal. **Example:** External damper control application using Start enable and Run enable. Motor can start only after the damper is fully open. 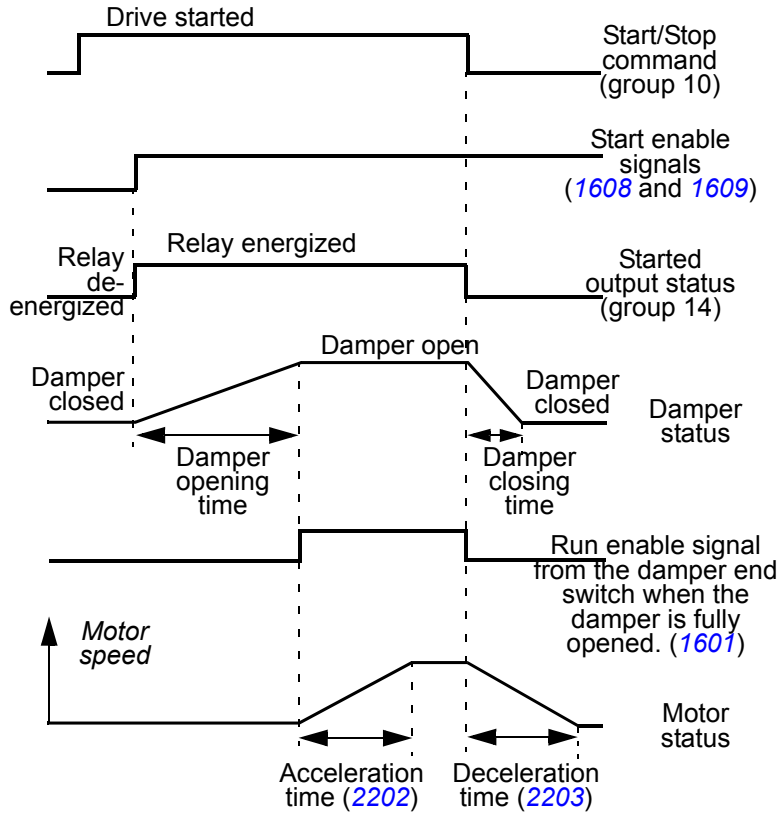	*NOT SEL*
	NOT SEL	Start enable signal is on.	0
	DI1	External signal required through digital input DI1. 1 = Start enable. If Start enable signal is switched off, the drive will not start or it coasts to stop if it is running and alarm *START ENABLE 1 MISSING* (*2021*) is activated	1
	DI2	See selection *DI1*.	2
	DI3	See selection *DI1*.	3
	DI4	See selection *DI1*.	4
	DI5	See selection *DI1*.	5

All parameters			
No.	**Name/Value**	**Description**	**Def/FbEq**
	COMM	Fieldbus interface as the source for the inverted Start enable (Start disable) signal, ie control word *0302 FB CMD WORD 2* bit 18 (bit 19 for Start enable 2). The control word is sent by the fieldbus controller through the fieldbus adapter or embedded fieldbus (Modbus) to the drive. For the control word bits, see section *DCU communication profile* on page *320*. **Note:** This setting applies only for the DCU profile.	7
	DI1(INV)	External signal required through inverted digital input DI1. 0 = Start enable. If Start enable signal is switched off, the drive will not start or it coasts to stop if it is running and alarm *START ENABLE 1 MISSING* (*2021*) is activated.	-1
	DI2(INV)	See selection *DI1(INV)*.	-2
	DI3(INV)	See selection *DI1(INV)*.	-3
	DI4(INV)	See selection *DI1(INV)*.	-4
	DI5(INV)	See selection *DI1(INV)*.	-5
1609	START ENABLE 2	Selects the source for the Start enable 2 signal. See parameter *1608 START ENABLE 1*.	*NOT SEL*
		See parameter *1608 START ENABLE 1*.	
1610	DISPLAY ALARMS	Activates/deactivates alarms *OVERCURRENT* (*2001*), *OVERVOLTAGE* (*2002*), *UNDERVOLTAGE* (*2003*) and *DEVICE OVERTEMP* (*2009*). For more information, see chapter *Fault tracing* on page *335*.	NO
	NO	Alarms are inactive.	0
	YES	Alarms are active.	1
1611	PARAMETER VIEW	Selects the parameter view, ie which parameters are shown. **Note:** This parameter is visible only when it is activated by the optional FlashDrop device. FlashDrop is designed for fast copying of parameters to unpowered drives. It allows for easy customization of the parameter list, eg selected parameters can be hidden. For more information, see *MFDT-01 FlashDrop user's manual* (3AFE68591074 [English]). FlashDrop parameter values are activated by setting parameter *9902 APPLIC MACRO* to 31 (*LOAD FD SET*).	*DEFAULT*
	DEFAULT	Complete long and short parameter lists	0
	FLASHDROP	FlashDrop parameter list. Does not include short parameter list. Parameters which are hidden by the FlashDrop device are not visible.	1
1612	FAN CONTROL	Selects the fan to be switched on and off automatically or keeps the fan on all the time. When the drive is used in ambient temperatures of 35 °C and above, it is recommended to have the cooling fan always on (selection *ON*).	*AUTO*

All parameters			
No.	**Name/Value**	**Description**	**Def/FbEq**
	AUTO	Automatic fan control. The fan is switched on when the drive is modulating. After the drive has stopped, the fan stays on until the temperature of the drive has dropped below 55 °C. The fan then remains switched off until either the drive is started or the temperature increases above 65 °C. If the control board is powered from an external 24 V power supply, the fan is switched off.	0
	ON	Fan always on	1
18 FREQ IN & TRAN OUT		Frequency input and transistor output signal processing.	
1801	FREQ INPUT MIN	Defines the minimum input value when DI5 is used as a frequency input. See section *Frequency input* on page *133*.	0 Hz
	0…16000 Hz	Minimum frequency	1 = 1 Hz
1802	FREQ INPUT MAX	Defines the maximum input value when DI5 is used as a frequency input. See section *Frequency input* on page *133*.	1000 Hz
	0…16000 Hz	Maximum frequency	1 = 1 Hz
1803	FILTER FREQ IN	Defines the filter time constant for frequency input, ie the time within which 63% of a step change is reached. See section *Frequency input* on page *133*.	0.1 s
	0.0…10.0 s	Filter time constant	1 = 0.1 s
1804	TO MODE	Selects the operation mode for the transistor output TO. See section *Transistor output* on page *134*.	*DIGITAL*
	DIGITAL	Transistor output is used as a digital output DO.	0
	FREQUENCY	Transistor output is used as a frequency output FO.	1
1805	DO SIGNAL	Selects a drive status indicated through digital output DO.	*FAULT(-1)*
		See parameter *1401 RELAY OUTPUT 1*.	
1806	DO ON DELAY	Defines the operation delay for digital output DO.	0.0 s
	0.0…3600.0 s	Delay time	1 = 0.1 s
1807	DO OFF DELAY	Defines the release delay for digital output DO.	0.0 s
	0.0…3600.0 s	Delay time	1 = 0.1 s
1808	FO CONTENT SEL	Selects a drive signal to be connected to frequency output FO.	104
	x…x	Parameter index in group *01 OPERATING DATA*. Eg 102 = *0102 SPEED*.	

All parameters			
No.	**Name/Value**	**Description**	**Def/FbEq**
1809	FO CONTENT MIN	Defines the minimum frequency output FO signal value. Signal is selected with parameter *1808 FO CONTENT SEL*. FO minimum and maximum correspond to *1811 MINIMUM FO* and *1812 MAXIMUM FO* settings as follows: 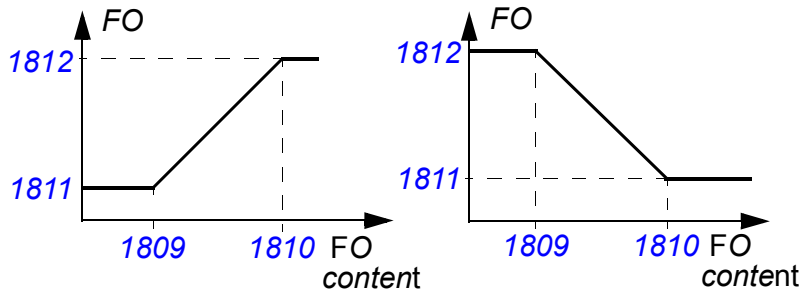	-
	x…x	Setting range depends on parameter *1808 FO CONTENT SEL* setting.	-
1810	FO CONTENT MAX	Defines the maximum frequency output FO signal value. Signal is selected with parameter *1808 FO CONTENT SEL*. See parameter *1809 FO CONTENT MIN*.	-
	x…x	Setting range depends on parameter *1808 FO CONTENT SEL* setting.	-
1811	MINIMUM FO	Defines the minimum value for frequency output FO.	10 Hz
	10…16000 Hz	Minimum frequency. See parameter *1809 FO CONTENT MIN*.	1 = 1 Hz
1812	MAXIMUM FO	Defines the maximum value for frequency output FO.	1000 Hz
	10…16000 Hz	Maximum frequency. See parameter *1809 FO CONTENT MIN*.	1 = 1 Hz
1813	FILTER FO	Defines the filter time constant for frequency output FO, ie the time within which 63% of a step change is reached.	0.1 s
	0.0…10.0 s	Filter time constant	1 = 0.1 s
19 TIMER & COUNTER		Timer and counter for start and stop control	
1901	TIMER DELAY	Defines the time delay for the timer.	10.00 s
	0.01…120.00 s	Delay time	1 = 0.01 s
1902	TIMER START	Selects the source for the timer start signal.	*NOT SEL*
	DI1(INV)	Timer start through inverted digital input DI1. Timer start on the falling edge of digital input DI1. **Note:** Timer start is not possible when reset is active (parameter *1903 TIMER RESET*).	-1
	DI2(INV)	See selection *DI1(INV)*.	-2
	DI3(INV)	See selection *DI1(INV)*.	-3
	DI4(INV)	See selection *DI1(INV)*.	-4
	DI5(INV)	See selection *DI1(INV)*.	-5
	NOT SEL	No start signal	0

All parameters			
No.	**Name/Value**	**Description**	**Def/FbEq**
	DI1	Timer start through digital input DI1. Timer start on the rising edge of digital input DI1. **Note:** Timer start is not possible when reset is active (parameter *1903 TIMER RESET*).	1
	DI2	See selection *DI1*.	2
	DI3	See selection *DI1*.	3
	DI4	See selection *DI1*.	4
	DI5	See selection *DI1*.	5
	START	External start signal, eg start signal through fieldbus	6
1903	TIMER RESET	Selects the source for the timer reset signal.	*NOT SEL*
	DI1(INV)	Timer reset through inverted digital input DI1. 0 = active, 1 = inactive.	-1
	DI2(INV)	See selection *DI1(INV)*.	-2
	DI3(INV)	See selection *DI1(INV)*.	-3
	DI4(INV)	See selection *DI1(INV)*.	-4
	DI5(INV)	See selection *DI1(INV)*.	-5
	NOT SEL	No reset signal	0
	DI1	Timer reset through digital input DI1. 1 = active, 0 = inactive.	1
	DI2	See selection *DI1*.	2
	DI3	See selection *DI1*.	3
	DI4	See selection *DI1*.	4
	DI5	See selection *DI1*.	5
	START	Timer reset at start. Start signal source is selected by parameter *1902 TIMER START*.	6
	START (INV)	Time reset at start (inverted), ie timer is reset when start signal is deactivated. Start signal source is selected by parameter *1902 TIMER START*.	7
	RESET	External reset, eg reset through fieldbus	8
1904	COUNTER ENABLE	Selects the source for the counter enable signal.	*DISABLED*
	DI1(INV)	Counter enable signal through inverted digital input DI1. 0 = active, 1 = inactive.	-1
	DI2(INV)	See selection *DI1(INV)*.	-2
	DI3(INV)	See selection *DI1(INV)*.	-3
	DI4(INV)	See selection *DI1(INV)*.	-4
	DI5(INV)	See selection *DI1(INV)*.	-5
	DISABLED	No counter enable	0
	DI1	Counter enable signal through digital input DI1. 1 = active, 0 = inactive.	1
	DI2	See selection *DI1*.	2
	DI3	See selection *DI1*.	3
	DI4	See selection *DI1*.	4

All parameters			
No.	**Name/Value**	**Description**	**Def/FbEq**
	DI5	See selection *DI1*.	5
	ENABLED	Counter enabled	6
1905	COUNTER LIMIT	Defines the counter limit.	1000
	0…65535	Limit value	1 = 1
1906	COUNTER INPUT	Selects the input signal source for the counter.	*PLS IN(DI 5)*
	PLS IN(DI 5)	Digital input DI5 pulses. When a pulse is detected, the counter value increases by 1.	1
	ENC W/O DIR	Encoder pulse edges. When a rising or a falling edge is detected, the counter value increases by 1.	2
	ENC WITH DIR	Encoder pulse edges. The direction of rotation is taken into account. When a rising or a falling edge is detected and the direction of rotation is forward, the counter value increases by 1. When the direction of rotation is reverse, the counter value decreases by 1.	3
	FILTERED DI5	Filtered digital input DI5 pulses. When a pulse is detected, the counter value increases by 1. **Note:** Due to filtering, the maximum input signal frequency is 50 Hz.	4
1907	COUNTER RESET	Selects the source for the counter reset signal.	*NOT SEL*
	DI1(INV)	Counter reset through inverted digital input DI1. 0 = active, 1 = inactive.	-1
	DI2(INV)	See selection *DI1(INV)*.	-2
	DI3(INV)	See selection *DI1(INV)*.	-3
	DI4(INV)	See selection *DI1(INV)*.	-4
	DI5(INV)	See selection *DI1(INV)*.	-5
	NOT SEL	No reset signal	0
	DI1	Counter reset through digital input DI1. 1 = active, 0 = inactive.	1
	DI2	See selection *DI1*.	2
	DI3	See selection *DI1*.	3
	DI4	See selection *DI1*.	4
	DI5	See selection *DI1*.	5
	AT LIMIT	Reset at the limit defined by parameter *1905 COUNTER LIMIT*	6
	STRT/STP CMD	Counter reset at start/stop command. Source for the start/stop is selected by parameter *1911 CNTR S/S COMMAND*.	7
	S/S CMD(INV)	Counter reset at start/stop command (inverted), ie counter is reset when start/stop command is deactivated. Start signal source is selected by parameter *1902 TIMER START*.	8

All parameters			
No.	**Name/Value**	**Description**	**Def/FbEq**
	RESET	Reset enabled	9
1908	COUNTER RES VAL	Defines the value for the counter after reset.	0
	0…65535	Counter value	1 = 1
1909	COUNT DIVIDER	Defines the divider for the pulse counter.	0
	0…12	Pulse counter divider N. Every 2^N bit is counted.	1 = 1
1910	COUNT DIRECTION	Defines the source for the counter direction selection.	*UP*
	DI1(INV)	Counter direction selection through inverted digital input DI1. 1 = counts up, 0 = counts down.	-1
	DI2(INV)	See selection *DI1(INV)*.	-2
	DI3(INV)	See selection *DI1(INV)*.	-3
	DI4(INV)	See selection *DI1(INV)*.	-4
	DI5(INV)	See selection *DI1(INV)*.	-5
	UP	Counts up	0
	DI1	Counter direction selection through digital input DI1. 0 = counts up, 1 = counts down.	1
	DI2	See selection *DI1*.	2
	DI3	See selection *DI1*.	3
	DI4	See selection *DI1*.	4
	DI5	See selection *DI1*.	5
	DOWN	Counts down	6
1911	CNTR S/S COMMAND	Selects the source for the drive start/stop command when parameter *1001 EXT1 COMMANDS* value is set to *COUNTER START* / *COUNTER STOP*.	*NOT SEL*
	DI1(INV)	Start/stop command through inverted digital input DI1. When parameter *1001 EXT1 COMMANDS* value is *COUNTER STOP*: 0 = start. Stop when counter limit defined by parameter *1905 COUNTER LIMIT* has been exceeded. When parameter *1001* value is *COUNTER START*: 0 = stop. Start when counter limit defined by parameter *1905* has been exceeded.	-1
	DI2(INV)	See selection *DI1(INV)*.	-2
	DI3(INV)	See selection *DI1(INV)*.	-3
	DI4(INV)	See selection *DI1(INV)*.	-4
	DI5(INV)	See selection *DI1(INV)*.	-5
	NOT SEL	Not start/stop command source	0

All parameters			
No.	**Name/Value**	**Description**	**Def/FbEq**
	DI1	Start/stop command through digital input DI1. When parameter *1001 EXT1 COMMANDS* value is *COUNTER STOP*: 1 = start. Stop when counter limit defined by parameter *1905 COUNTER LIMIT* has been exceeded. When parameter *1001* value is *COUNTER START*: 1 = stop. Start when counter limit defined by parameter *1905* has been exceeded.	1
	DI2	See selection *DI1*.	2
	DI3	See selection *DI1*.	3
	DI4	See selection *DI1*.	4
	DI5	See selection *DI1*.	5
	ACTIVATE	External start/stop command, eg through fieldbus	6
20 LIMITS		Drive operation limits. Speed values are used in vector control and frequency values are used in scalar control. The control mode is selected by parameter *9904 MOTOR CTRL MODE*.	
2001	MINIMUM SPEED	Defines the allowed minimum speed. A positive (or zero) minimum speed value defines two ranges, one positive and one negative. A negative minimum speed value defines one speed range. 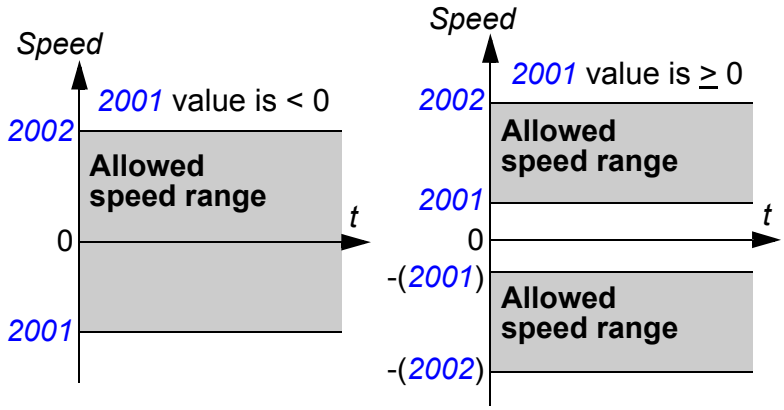	0 rpm
	-30000… 30000 rpm	Minimum speed	1 = 1 rpm
2002	MAXIMUM SPEED	Defines the allowed maximum speed. See parameter *2001 MINIMUM SPEED*.	E: 1500 rpm / U: 1800 rpm
	0…30000 rpm	Maximum speed	1 = 1 rpm
2003	MAX CURRENT	Defines the allowed maximum motor current.	1.8 · I_{2N} A
	0.0…1.8 · I_{2N} A	Current	1 = 0.1 A

All parameters			
No.	**Name/Value**	**Description**	**Def/FbEq**
2005	OVERVOLT CTRL	Activates or deactivates the overvoltage control of the intermediate DC link. Fast braking of a high inertia load causes the voltage to rise to the overvoltage control limit. To prevent the DC voltage from exceeding the limit, the overvoltage controller automatically decreases the braking torque. **Note:** If a brake chopper and resistor are connected to the drive, the controller must be off (selection *DISABLE*) to allow chopper operation.	*ENABLE*
	DISABLE	Overvoltage control deactivated	0
	ENABLE	Overvoltage control activated	1
2006	UNDERVOLT CTRL	Activates or deactivates the undervoltage control of the intermediate DC link. If the DC voltage drops due to input power cut off, the undervoltage controller will automatically decrease the motor speed in order to keep the voltage above the lower limit. By decreasing the motor speed, the inertia of the load will cause regeneration back into the drive, keeping the DC link charged and preventing an undervoltage trip until the motor coasts to stop. This will act as a power-loss ride-through functionality in systems with a high inertia, such as a centrifuge or a fan. See section *Motor identification* on page *135*.	*ENABLE(TIME)*
	DISABLE	Undervoltage control deactivated	0
	ENABLE(TIME)	Undervoltage control activated. The undervoltage control is active for 500 ms.	1
	ENABLE	Undervoltage control activated. No operation time limit.	2
2007	MINIMUM FREQ	Defines the minimum limit for the drive output frequency. A positive (or zero) minimum frequency value defines two ranges, one positive and one negative. A negative minimum frequency value defines one speed range. **Note:** *MINIMUM FREQ* ≤ *MAXIMUM FREQ*. 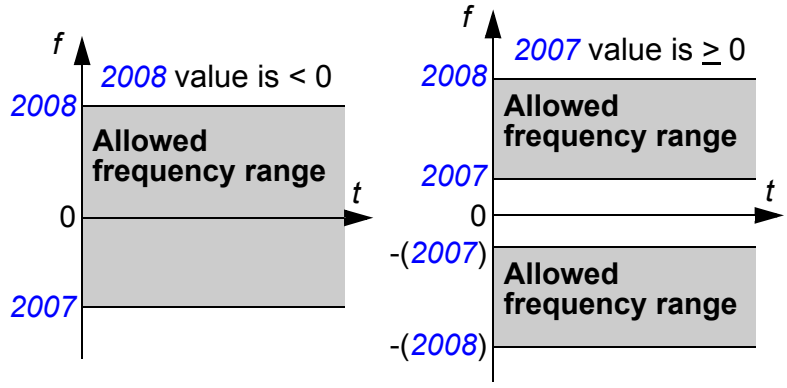	0.0 Hz
	-500.0…500.0 Hz	Minimum frequency	1 = 0.1 Hz

All parameters			
No.	**Name/Value**	**Description**	**Def/FbEq**
2008	MAXIMUM FREQ	Defines the maximum limit for the drive output frequency.	E: 50.0 Hz U: 60.0 Hz
	0.0…600.0 Hz	Maximum frequency	1 = 0.1 Hz
2013	MIN TORQUE SEL	Selects the minimum torque limit for the drive.	*MIN TORQUE 1*
	MIN TORQUE 1	Value defined by parameter *2015 MIN TORQUE 1*	0
	DI1	Digital input DI1. 0 = parameter *2015 MIN TORQUE 1* value. 1 = parameter *2016 MIN TORQUE 2* value.	1
	DI2	See selection *DI1*.	2
	DI3	See selection *DI1*.	3
	DI4	See selection *DI1*.	4
	DI5	See selection *DI1*.	5
	COMM	Fieldbus interface as the source for the torque limit 1/2 selection, ie control word *0301 FB CMD WORD 1* bit 15. The control word is sent by the fieldbus controller through the fieldbus adapter or embedded fieldbus (Modbus) to the drive. For the control word bits, see section *DCU communication profile* on page *320*. Minimum torque limit 1 is defined by parameter *2015 MIN TORQUE 1* and minimum torque limit 2 is defined by parameter *2016 MIN TORQUE 2*. **Note:** This setting applies only for the DCU profile.	7
	DI1(INV)	Inverted digital input DI1. 1 = value of parameter *2015 MIN TORQUE 1* 1. 0 = value of parameter *2016 MIN TORQUE 2*.	-1
	DI2(INV)	See selection *DI1(INV)*.	-2
	DI3(INV)	See selection *DI1(INV)*.	-3
	DI4(INV)	See selection *DI1(INV)*.	-4
	DI5(INV)	See selection *DI1(INV)*.	-5
2014	MAX TORQUE SEL	Selects the maximum torque limit for the drive.	*MAX TORQUE 1*
	MAX TORQUE 1	Value of parameter *2017 MAX TORQUE 1*	
	DI1	Digital input DI1. 0 = parameter *2017 MAX TORQUE 1* value. 1 = parameter *2018 MAX TORQUE 2* value.	1
	DI2	See selection *DI1*.	2
	DI3	See selection *DI1*.	3
	DI4	See selection *DI1*.	4
	DI5	See selection *DI1*.	5

All parameters			
No.	**Name/Value**	**Description**	**Def/FbEq**
	COMM	Fieldbus interface as the source for the torque limit 1/2 selection, ie control word *0301 FB CMD WORD 1* bit 15. The control word is sent by the fieldbus controller through the fieldbus adapter or embedded fieldbus (Modbus) to the drive. For the control word bits, see section *DCU communication profile* on page *320*. Maximum torque limit 1 is defined by parameter *2017 MAX TORQUE 1* and maximum torque limit 2 is defined by parameter *2018 MAX TORQUE 2*. **Note:** This setting applies only for the DCU profile.	7
	EXT2	Value of signal *0112 EXTERNAL REF 2*	11
	DI1(INV)	Inverted digital input DI1. 1 = parameter *2017 MAX TORQUE 1* value. 0 = parameter *2018 MAX TORQUE 2* value.	-1
	DI2(INV)	See selection *DI1(INV)*.	-2
	DI3(INV)	See selection *DI1(INV)*.	-3
	DI4(INV)	See selection *DI1(INV)*.	-4
	DI5(INV)	See selection *DI1(INV)*.	-5
2015	MIN TORQUE 1	Defines minimum torque limit 1 for the drive. See parameter *2013 MIN TORQUE SEL*.	-300%
	-600.0…0.0%	Value in percent of the motor nominal torque	1 = 0.1%
2016	MIN TORQUE 2	Defines minimum torque limit 2 for the drive. See parameter *2013 MIN TORQUE SEL*.	-300%
	-600.0…0.0%	Value in percent of the motor nominal torque	1 = 0.1%
2017	MAX TORQUE 1	Defines maximum torque limit 1 for the drive. See parameter *2014 MAX TORQUE SEL*.	300%
	0.0…600.0%	Value in percent of the motor nominal torque	1 = 0.1%
2018	MAX TORQUE 2	Defines maximum torque limit 2 for the drive. See parameter *2014 MAX TORQUE SEL*.	300%
	0.0…600.0%	Value in percent of the motor nominal torque	1 = 0.1%
2020	BRAKE CHOPPER	Selects the brake chopper control. When using the drive in a Common DC bus system, the parameter must be set to *EXTERNAL*. When in Common DC, the drive cannot feed or receive more power than P_N.	*INBUILT*
	INBUILT	Internal brake chopper control. **Note:** Ensure the brake resistor(s) is installed and the overvoltage control is switched off by setting parameter *2005 OVERVOLT CTRL* to selection *DISABLE*.	0
	EXTERNAL	External brake chopper control. **Note:** The drive is compatible only with ABB **ACS-BRK-X** brake units. **Note:** Ensure the brake unit is installed and the overvoltage control is switched off by setting parameter *2005 OVERVOLT CTRL* to selection *DISABLE*.	1

All parameters			
No.	**Name/Value**	**Description**	**Def/FbEq**
2021	MAX SPEED SEL	Maximum speed source for torque control	*PAR 2002*
	PAR 2002	Value of parameter *2002 MAXIMUM SPEED*	0
	EXT REF 1	Value of signal *0111 EXTERNAL REF 1*	1
21 START/STOP		Start and stop modes of the motor	
2101	START FUNCTION	Selects the motor starting method.	*AUTO*
	AUTO	The drive starts the motor instantly from zero frequency if parameter *9904 MOTOR CTRL MODE* setting is *SCALAR: FREQ*. If flying start is required use selection *SCAN START*. If parameter *9904 MOTOR CTRL MODE* value is *VECTOR: SPEED* or *VECTOR: TORQ*, the drive pre-magnetizes the motor with DC current before the start. The pre-magnetizing time is defined by parameter *2103 DC MAGN TIME*. See selection *DC MAGN*. For permanent magnet motors, flying start is used if the motor is rotating.	1
	DC MAGN	The drive pre-magnetizes the motor with DC current before the start. The pre-magnetizing time is defined by parameter *2103 DC MAGN TIME*. If parameter *9904 MOTOR CTRL MODE* value is *VECTOR: SPEED* or *VECTOR: TORQ*, DC magnetizing guarantees the highest possible break-away torque when the pre-magnetizing is set long enough. **Note:** Starting the drive connected to a rotating motor is not possible when *DC MAGN* is selected. When a permanent magnet motor is used, alarm *MOTOR BACK EMF* (*2029*) is generated. ⚠ **WARNING!** The drive will start after the set pre-magnetizing time has passed even if the motor magnetization is not completed. In applications where a full break-away torque is essential, always ensure that the constant magnetizing time is long enough to allow generation of full magnetization and torque.	2

All parameters			
No.	**Name/Value**	**Description**	**Def/FbEq**
	TORQ BOOST	Torque boost should be selected if a high break-away torque is required. Used only when parameter *9904 MOTOR CTRL MODE* setting is *SCALAR: FREQ*. The drive pre-magnetizes the motor with DC current before the start. The pre-magnetizing time is defined by parameter *2103 DC MAGN TIME*. Torque boost is applied at start. Torque boost is stopped when output frequency exceeds 20 Hz or when it is equal to the reference value. See parameter *2110 TORQ BOOST CURR*. **Note:** Starting the drive connected to a rotating motor is not possible when *TORQ BOOST* is selected. ⚠ **WARNING!** The drive will start after the set pre-magnetizing time has passed although the motor magnetization is not completed. In applications where a full break-away torque is essential, always ensure that the constant magnetizing time is long enough to allow generation of full magnetization and torque.	4
	SCAN START	Frequency scanning flying start (starting the drive connected to a rotating motor). Based on frequency scanning (interval *2008 MAXIMUM FREQ*…*2007 MINIMUM FREQ*) to identify the frequency. If frequency identification fails, DC magnetization is used (see selection *DC MAGN*).	6
	SCAN + BOOST	Combines scanning start (starting the drive connected to a rotating motor) and torque boost. See selections *SCAN START* and *TORQ BOOST*. If frequency identification fails, torque boost is used. Used only when parameter *9904 MOTOR CTRL MODE* setting is *SCALAR: FREQ*.	7
2102	STOP FUNCTION	Selects the motor stop function.	*COAST*
	COAST	Stop by cutting off the motor power supply. The motor coasts to stop.	1
	RAMP	Stop along a ramp. See parameter group *22 ACCEL/DECEL*.	2
	SPEED COMP	Speed compensation is used for constant distance braking. Speed difference (between used speed and maximum speed) is compensated by running the drive with current speed before the motor is stopped along a ramp. See section *Acceleration and deceleration ramps* on page *139*.	3

All parameters			
No.	**Name/Value**	**Description**	**Def/FbEq**
	SPEED COMP FWD	Speed compensation is used for constant distance braking if the direction of rotation is forward. Speed difference (between used speed and maximum speed) is compensated by running the drive with current speed before the motor is stopped along a ramp. See section *Acceleration and deceleration ramps* on page *139*. If the direction of rotation is reverse, the drive is stopped along a ramp.	4
	SPEED COMP REV	Speed compensation is used for constant distance braking if the direction of rotation is reverse. Speed difference (between used speed and maximum speed) is compensated by running the drive with current speed before the motor is stopped along a ramp. See section *Acceleration and deceleration ramps* on page *139*. If the direction of rotation is forward, the drive is stopped along a ramp.	5
2103	DC MAGN TIME	Defines the pre-magnetizing time. See parameter *2101 START FUNCTION*. After the start command, the drive automatically pre-magnetizes the motor for the defined time.	0.30 s
	0.00…10.00 s	Magnetizing time. Set this value long enough to allow full motor magnetization. Too long a time heats the motor excessively.	1 = 0.01 s
2104	DC HOLD CTL	Activates the DC hold or DC braking function.	*NOT SEL*
	NOT SEL	Inactive	0

All parameters			
No.	**Name/Value**	**Description**	**Def/FbEq**
	DC HOLD	DC hold function active. DC hold is not possible if parameter *9904 MOTOR CTRL MODE* setting is *SCALAR: FREQ*. When both the reference and the motor speed drop below the value of parameter *2105 DC HOLD SPEED*, the drive will stop generating sinusoidal current and start to inject DC into the motor. The current is set by parameter *2106 DC CURR REF*. When the reference speed exceeds parameter *2105* value, normal drive operation continues. 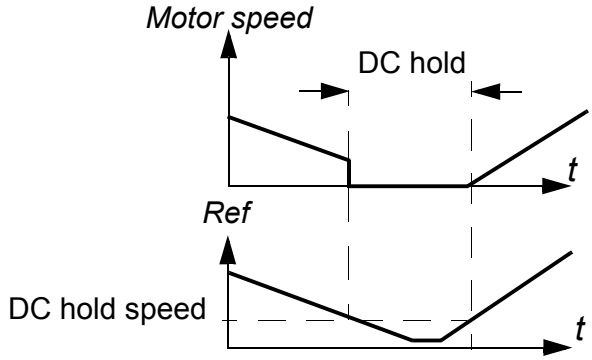 **Note:** DC hold has no effect if the start signal is switched off. **Note:** Injecting DC current into the motor causes the motor to heat up. In applications where long DC hold times are required, externally ventilated motors should be used. If the DC hold period is long, the DC hold cannot prevent the motor shaft from rotating if a constant load is applied to the motor.	1
	DC BRAKING	DC current braking function active. If parameter *2102 STOP FUNCTION* is set to *COAST*, DC braking is applied after the start command is removed. If parameter *2102 STOP FUNCTION* is set to *RAMP*, DC braking is applied after the ramp.	2
2105	DC HOLD SPEED	Defines the DC hold speed. See parameter *2104 DC HOLD CTL*.	5 rpm
	0…360 rpm	Speed	1 = 1 rpm
2106	DC CURR REF	Defines the DC hold current. See parameter *2104 DC HOLD CTL*.	30%
	0…100%	Value in percent of the motor nominal current (parameter *9906 MOTOR NOM CURR*)	1 = 1%
2107	DC BRAKE TIME	Defines the DC brake time.	0.0 s
	0.0…250.0 s	Time	1 = 0.1 s

All parameters			
No.	**Name/Value**	**Description**	**Def/FbEq**
2108	START INHIBIT	Sets the Start inhibit function on or off. If the drive is not actively started and running, the Start inhibit function ignores a pending start command in any of the following situations and a new start command is required: • a fault is reset. • Run enable signal activates while the start command is active. See parameter *1601 RUN ENABLE*. • control mode changes from local to remote. • external control mode switches from EXT1 to EXT2 or from EXT2 to EXT1.	*OFF*
	OFF	Disabled	0
	ON	Enabled	1
2109	EMERG STOP SEL	Selects the source for the external emergency stop command. The drive cannot be restarted before the emergency stop command is reset. **Note:** The installation must include emergency stop devices and any other safety equipment that may be needed. Pressing the stop key on the drive's control panel does NOT: • generate an emergency stop of the motor • separate the drive from dangerous potential.	*NOT SEL*
	NOT SEL	Emergency stop function is not selected	0
	DI1	Digital input DI1. 1 = stop along the emergency stop ramp. See parameter *2208 EMERG DEC TIME*. 0 = emergency stop command reset.	1
	DI2	See selection *DI1*.	2
	DI3	See selection *DI1*.	3
	DI4	See selection *DI1*.	4
	DI5	See selection *DI1*.	5
	DI1(INV)	Inverted digital input DI. 0 = stop along the emergency stop ramp. See parameter *2208 EMERG DEC TIME*. 1 = emergency stop command reset	-1
	DI2(INV)	See selection *DI1(INV)*.	-2
	DI3(INV)	See selection *DI1(INV)*.	-3
	DI4(INV)	See selection *DI1(INV)*.	-4
	DI5(INV)	See selection *DI1(INV)*.	-5
2110	TORQ BOOST CURR	Defines the maximum supplied current during torque boost. See parameter *2101 START FUNCTION*.	100%
	15…300%	Value in percent	1 = 1%
2111	STOP SIGNAL DLY	Defines the stop signal delay time when parameter *2102 STOP FUNCTION* is set to *SPEED COMP*.	0 ms
	0…10000 ms	Delay time	1 = 1 ms

All parameters			
No.	**Name/Value**	**Description**	**Def/FbEq**
2112	ZERO SPEED DELAY	Defines the delay for the Zero speed delay function. The function is useful in applications where a smooth and quick restarting is essential. During the delay the drive knows accurately the rotor position. **No Zero speed delay** **With Zero speed delay** 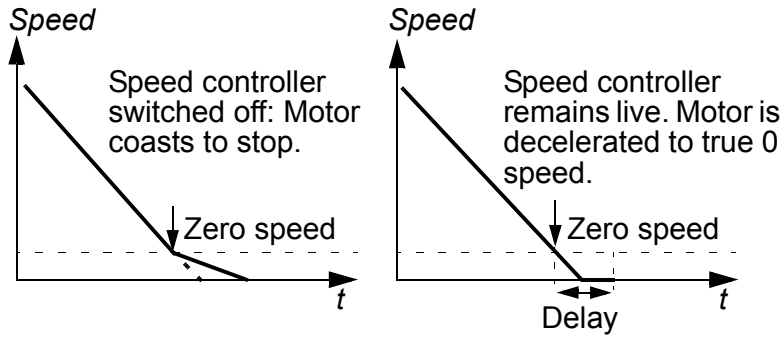 **No Zero speed delay** The drive receives a stop command and decelerates along a ramp. When the motor actual speed falls below an internal limit (called Zero speed), the speed controller is switched off. The inverter modulation is stopped and the motor coasts to standstill. **With Zero speed delay** The drive receives a stop command and decelerates along a ramp. When the actual motor speed falls below an internal limit (called Zero speed), the zero speed delay function activates. During the delay the functions keeps the speed controller live: The inverter modulates, motor is magnetized and the drive is ready for a quick restart.	*0.0 = NOT SEL*
	0.0 = NOT SEL 0.0…60.0 s	Delay time. If parameter value is set to zero, Zero speed delay function is disabled.	1 = 0.1 s
22 ACCEL/DECEL		Acceleration and deceleration times	
2201	ACC/DEC 1/2 SEL	Defines the source from which the drive reads the signal that selects between the two ramp pairs, acceleration/deceleration pair 1 and 2. Ramp pair 1 is defined by parameters *2202*…*2204*. Ramp pair 2 is defined by parameters *2205*…*2207*.	*DI5*
	NOT SEL	Ramp pair 1 is used.	0
	DI1	Digital input DI1. 1 = ramp pair 2, 0 = ramp pair 1.	1
	DI2	See selection *DI1*.	2
	DI3	See selection *DI1*.	3
	DI4	See selection *DI1*.	4
	DI5	See selection *DI1*.	5

All parameters			
No.	**Name/Value**	**Description**	**Def/FbEq**
	COMM	Fieldbus interface as the source for ramp pair 1/2 selection, ie control word *0301 FB CMD WORD 1* bit 10. The control word is sent by the fieldbus controller through the fieldbus adapter or embedded fieldbus (Modbus) to the drive. For the control word bits, see section *DCU communication profile* on page *320*. **Note:** This setting applies only for the DCU profile.	7
	SEQ PROG	Sequence programming ramp defined by parameter *8422 ST1 RAMP* (or *8423*/…/*8492*)	10
	DI1(INV)	Inverted digital input DI1. 0 = ramp pair 2, 1 = ramp pair 1.	-1
	DI2(INV)	See selection *DI1(INV)*.	-2
	DI3(INV)	See selection *DI1(INV)*.	-3
	DI4(INV)	See selection *DI1(INV)*.	-4
	DI5(INV)	See selection *DI1(INV)*.	-5
2202	ACCELER TIME 1	Defines the acceleration time 1, ie the time required for the speed to change from zero to the speed defined by parameter *2008 MAXIMUM FREQ* (in scalar control) / *2002 MAXIMUM SPEED* (in vector control). The control mode is selected by parameter *9904 MOTOR CTRL MODE*. • If the speed reference increases faster than the set acceleration rate, the motor speed will follow the acceleration rate. • If the speed reference increases slower than the set acceleration rate, the motor speed will follow the reference signal. • If the acceleration time is set too short, the drive will automatically prolong the acceleration in order not to exceed the drive operating limits. Actual acceleration time depends on parameter *2204 RAMP SHAPE 1* setting.	5.0 s
	0.0…1800.0 s	Time	1 = 0.1 s

All parameters			
No.	**Name/Value**	**Description**	**Def/FbEq**
2203	DECELER TIME 1	Defines the deceleration time 1, ie the time required for the speed to change from the value defined by parameter *2008 MAXIMUM FREQ* (in scalar control) / *2002 MAXIMUM SPEED* (in vector control) to zero. The control mode is selected by parameter *9904 MOTOR CTRL MODE*. • If the speed reference decreases slower than the set deceleration rate, the motor speed will follow the reference signal. • If the reference changes faster than the set deceleration rate, the motor speed will follow the deceleration rate. • If the deceleration time is set too short, the drive will automatically prolong the deceleration in order not to exceed drive operating limits. If a short deceleration time is needed for a high inertia application, the drive should be equipped with a brake resistor. Actual deceleration time depends on parameter *2204 RAMP SHAPE 1* setting.	5.0 s
	0.0…1800.0 s	Time	1 = 0.1 s
2204	RAMP SHAPE 1	Selects the shape of the acceleration/deceleration ramp 1. The function is deactivated during emergency stop and jogging.	*0.0 = LINEAR*
	0.0 = LINEAR 0.1…1000.0 s	0.0: Linear ramp. Suitable for steady acceleration or deceleration and for slow ramps. 0.1…1000.0 s: S-curve ramp. S-curve ramps are ideal for conveyors carrying fragile loads, or other applications where a smooth transition is required when changing from one speed to another. The S-curve consists of symmetrical curves at both ends of the ramp and a linear part in between. A rule of thumb: A suitable relation between the ramp shape time and the acceleration ramp time is 1/5. 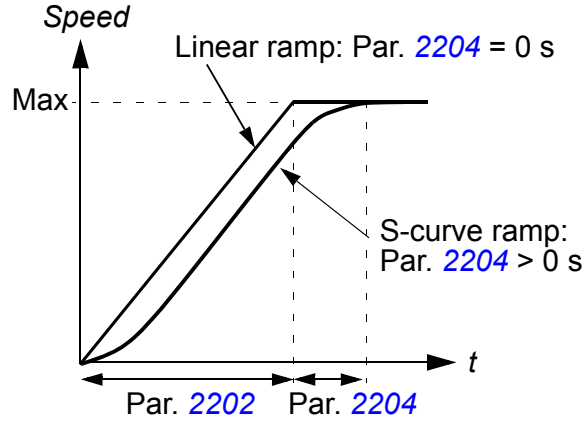	1 = 0.1 s

All parameters			
No.	**Name/Value**	**Description**	**Def/FbEq**
2205	ACCELER TIME 2	Defines the acceleration time 2, ie the time required for the speed to change from zero to the speed defined by parameter *2008 MAXIMUM FREQ* (in scalar control) / *2002 MAXIMUM SPEED* (in vector control). The control mode is selected by parameter *9904 MOTOR CTRL MODE*. See parameter *2202 ACCELER TIME 1*. Acceleration time 2 is used also as jogging acceleration time. See parameter *1010 JOGGING SEL*.	60.0 s
	0.0…1800.0 s	Time	1 = 0.1 s
2206	DECELER TIME 2	Defines the deceleration time 2, ie the time required for the speed to change from the value defined by parameter *2008 MAXIMUM FREQ* (in scalar control) / *2002 MAXIMUM SPEED* (in vector control) to zero. The control mode is selected by parameter *9904 MOTOR CTRL MODE*. See parameter *2203 DECELER TIME 1*. Deceleration time 2 is used also as jogging deceleration time. See parameter *1010 JOGGING SEL*.	60.0 s
	0.0…1800.0 s	Time	1 = 0.1 s
2207	RAMP SHAPE 2	Selects the shape of the acceleration/deceleration ramp 2. The function is deactivated during emergency stop. During jogging, parameter value is set to zero (ie linear ramp). See *1010 JOGGING SEL*.	*0.0 = LINEAR*
	0.0 = LINEAR 0.1…1000.0 s	See parameter *2204 RAMP SHAPE 1*.	1 = 0.1 s
2208	EMERG DEC TIME	Defines the time within which the drive is stopped if an emergency stop is activated. See parameter *2109 EMERG STOP SEL*.	1.0 s
	0.0…1800.0 s	Time	1 = 0.1 s
2209	RAMP INPUT 0	Defines the source for forcing the ramp input to zero.	*NOT SEL*
	NOT SEL	Not selected	0
	DI1	Digital input DI1. 1 = ramp input is forced to zero. Ramp output will ramp to zero according to the used ramp time.	1
	DI2	See selection DI1.	2
	DI3	See selection DI1.	3
	DI4	See selection DI1.	4
	DI5	See selection DI1.	5
	COMM	Fieldbus interface as the source for forcing ramp input to zero, ie control word *0301 FB CMD WORD 1* bit 13 (with ABB drives profile *5319 EFB PAR 19* bit 6). The control word is sent by the fieldbus controller through the fieldbus adapter or embedded fieldbus (Modbus) to the drive. For the control word bits, see sections *DCU communication profile* on page *320* and *ABB drives communication profile* on page *315*.	7

All parameters			
No.	**Name/Value**	**Description**	**Def/FbEq**
	DI1(INV)	Inverted digital input DI1. 0 = ramp input is forced to zero. Ramp output will ramp to zero according to the used ramp time.	-1
	DI2(INV)	See selection DI1(INV).	-2
	DI3(INV)	See selection DI1(INV).	-3
	DI4(INV)	See selection DI1(INV).	-4
	DI5(INV)	See selection DI1(INV).	-5
23 SPEED CONTROL		Speed controller variables. See section *Speed controller tuning* on page *142*. **Note:** These parameters do not affect drive operation in scalar control, ie when parameter *9904 MOTOR CTRL MODE* setting is *SCALAR: FREQ*.	
2301	PROP GAIN	Defines a relative gain for the speed controller. High gain may cause speed oscillation. The figure below shows the speed controller output after an error step when the error remains constant. 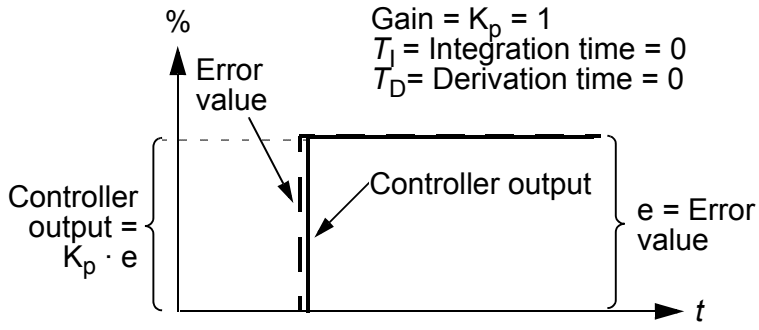 **Note:** For automatic setting of the gain, use autotune run (parameter *2305 AUTOTUNE RUN*).	5.00
	0.00…200.00	Gain	1 = 0.01

All parameters			
No.	**Name/Value**	**Description**	**Def/FbEq**
2302	INTEGRATION TIME	Defines an integration time for the speed controller. The integration time defines the rate at which the controller output changes when the error value is constant. The shorter the integration time, the faster the continuous error value is corrected. Too short an integration time makes the control unstable. The figure below shows the speed controller output after an error step when the error remains constant. 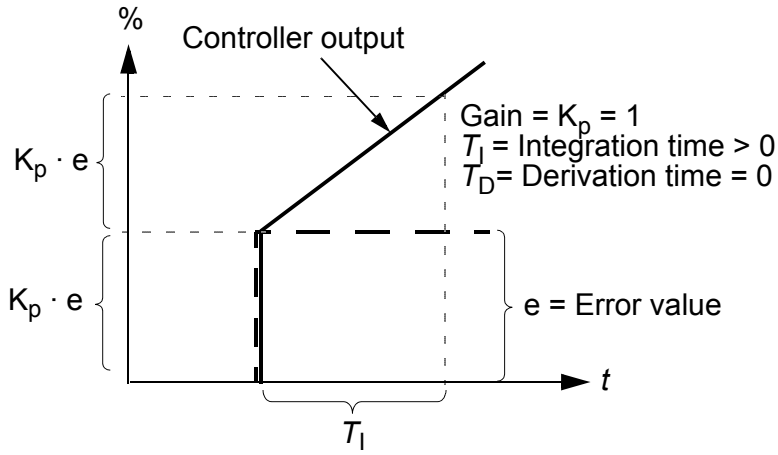 **Note:** For automatic setting of the integration time, use autotune run (parameter *2305 AUTOTUNE RUN*).	0.50 s
	0.00…600.00 s	Time	1 = 0.01 s

All parameters			
No.	**Name/Value**	**Description**	**Def/FbEq**
2303	DERIVATION TIME	Defines the derivation time for the speed controller. Derivative action boosts the controller output if the error value changes. The longer the derivation time, the more the speed controller output is boosted during the change. If the derivation time is set to zero, the controller works as a PI controller, otherwise as a PID controller. The derivation makes the control more responsive for disturbances. The figure below shows the speed controller output after an error step when the error remains constant. 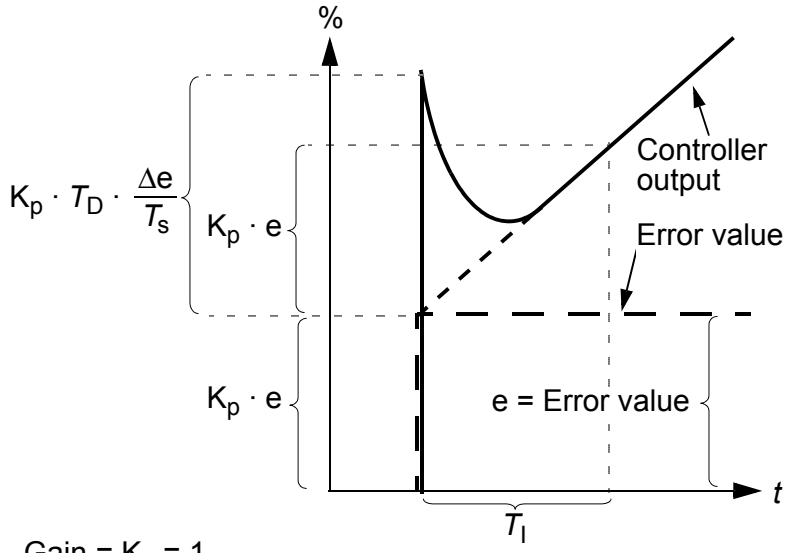 Gain = K_p = 1 T_I = Integration time > 0 T_D= Derivation time > 0 T_s= Sample time period = 2 ms Δe = Error value change between two samples	0 ms
	0….10000 ms	Time	1 = 1 ms

All parameters			
No.	**Name/Value**	**Description**	**Def/FbEq**
2304	ACC COMPENSATION	Defines the derivation time for acceleration/(deceleration) compensation. In order to compensate inertia during acceleration, a derivative of the reference is added to the output of the speed controller. The principle of a derivative action is described for parameter *2303 DERIVATION TIME*. **Note:** As a general rule, set this parameter to the value between 50 and 100% of the sum of the mechanical time constants of the motor and the driven machine. (The speed controller Autotune run does this automatically, see parameter *2305 AUTOTUNE RUN*.) The figure below shows the speed responses when a high inertia load is accelerated along a ramp. 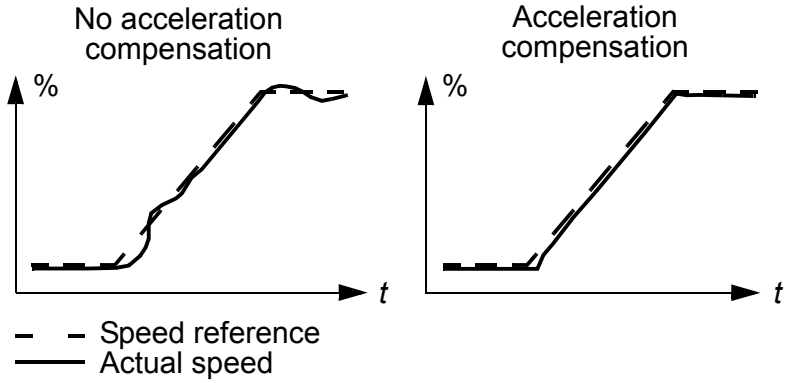	0.00 s
	0.00…600.00 s	Time	1 = 0.01 s
2305	AUTOTUNE RUN	Start automatic tuning of the speed controller. Instructions: • Run the motor at a constant speed of 20 to 40% of the rated speed. • Change the autotuning parameter 2305 to *ON*. **Note:** The motor load must be connected to the motor.	*OFF*
	OFF	No autotuning	0
	ON	Activates the speed controller autotuning. The drive • accelerates the motor • calculates values for proportional gain, integration time and acceleration compensation (parameter *2301 PROP GAIN*, *2302 INTEGRATION TIME* and *2304 ACC COMPENSATION* values). Setting is automatically reverted to *OFF*.	1
24 TORQUE CONTROL		Torque control variables	
2401	TORQ RAMP UP	Defines the torque reference ramp up time, ie the minimum time for the reference to increase from zero to the nominal motor torque.	0.00 s
	0.00…120.00 s	Time	1 = 0.01 s

All parameters			
No.	**Name/Value**	**Description**	**Def/FbEq**
2402	TORQ RAMP DOWN	Defines the torque reference ramp down time, ie the minimum time for the reference to decrease from the nominal motor torque to zero.	0.00 s
	0.00…120.00 s	Time	1 = 0.01 s
25 CRITICAL SPEEDS		Speed bands within which the drive is not allowed to operate.	
2501	CRIT SPEED SEL	Activates/deactivates the critical speeds function. The critical speed function avoids specific speed ranges. **Example:** A fan has vibrations in the range of 18 to 23 Hz and 46 to 52 Hz. To make the drive to jump over the vibration speed ranges: • Activate the critical speeds function. • Set the critical speed ranges as in the figure below. 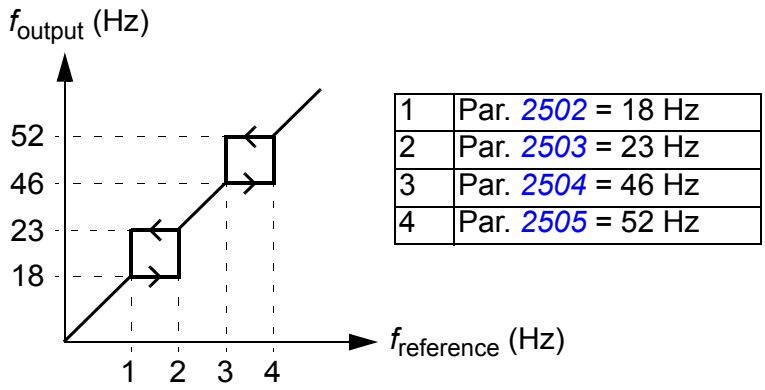 1 Par. *2502* = 18 Hz 2 Par. *2503* = 23 Hz 3 Par. *2504* = 46 Hz 4 Par. *2505* = 52 Hz	*OFF*
	OFF	Inactive	0
	ON	Active	1
2502	CRIT SPEED 1 LO	Defines the minimum limit for critical speed/frequency range 1.	0.0 Hz / 1 rpm
	0.0…500.0 Hz / 0…30000 rpm	Limit in rpm. Limit in Hz if parameter *9904 MOTOR CTRL MODE* setting is *SCALAR: FREQ*. The value cannot be above the maximum (parameter *2503 CRIT SPEED 1 HI*).	1 = 0.1 Hz / 1 rpm
2503	CRIT SPEED 1 HI	Defines the maximum limit for critical speed/frequency range 1.	0.0 Hz / 1 rpm
	0.0…500.0 Hz / 0…30000 rpm	Limit in rpm. Limit in Hz if parameter *9904 MOTOR CTRL MODE* setting is *SCALAR: FREQ*. The value cannot be below the minimum (parameter *2502 CRIT SPEED 1 LO*).	1 = 0.1 Hz / 1 rpm
2504	CRIT SPEED 2 LO	See parameter *2502 CRIT SPEED 1 LO*.	0.0 Hz / 1 rpm
	0.0…500.0 Hz / 0…30000 rpm	See parameter *2502*.	1 = 0.1 Hz / 1 rpm
2505	CRIT SPEED 2 HI	See parameter *2503 CRIT SPEED 1 HI*.	0.0 Hz / 1 rpm
	0.0…500.0 Hz / 0…30000 rpm	See parameter *2503*.	1 = 0.1 Hz / 1 rpm

All parameters			
No.	**Name/Value**	**Description**	**Def/FbEq**
2506	CRIT SPEED 3 LO	See parameter *2502 CRIT SPEED 1 LO*.	0.0 Hz / 1 rpm
	0.0…500.0 Hz / 0…30000 rpm	See parameter *2502*.	1 = 0.1 Hz / 1 rpm
2507	CRIT SPEED 3 HI	See parameter *2503 CRIT SPEED 1 HI*.	0.0 Hz / 1 rpm
	0.0…500.0 Hz / 0…30000 rpm	See parameter *2503*.	1 = 0.1 Hz / 1 rpm
26 MOTOR CONTROL		Motor control variables	
2601	FLUX OPT ENABLE	Activates/deactivates the flux optimization function. Flux optimization reduces the total energy consumption and motor noise level when the drive operates below the nominal load. The total efficiency (motor and the drive) can be improved by 1% to 10%, depending on the load torque and speed. The disadvantage of this function is that the dynamic performance of the drive is weakened.	*OFF*
	OFF	Inactive	0
	ON	Active	1
2602	FLUX BRAKING	Activates/deactivates the Flux braking function. See section *Flux braking* on page *138*.	*OFF*
	OFF	Inactive	0
	ON	Active	1

<table>
<tr><th colspan="4">All parameters</th></tr>
<tr><th>No.</th><th>Name/Value</th><th>Description</th><th>Def/FbEq</th></tr>
<tr><td>2603</td><td>IR COMP VOLT</td><td>Defines the output voltage boost at zero speed (IR compensation). The function is useful in applications with a high break-away torque when vector control cannot be applied.
To prevent overheating, set IR compensation voltage as low as possible.
Note: The function can be used only when parameter 9904 MOTOR CTRL MODE setting is SCALAR: FREQ.
The figure below illustrates the IR compensation.
Typical IR compensation values:
<table>
<tr><td>P_N (kW)</td><td>0.37</td><td>0.75</td><td>2.2</td><td>4.0</td><td>7.5</td></tr>
<tr><td colspan="6">200…240 V units</td></tr>
<tr><td>IR comp (V)</td><td>8.4</td><td>7.7</td><td>5.6</td><td>8.4</td><td>N/A</td></tr>
<tr><td colspan="6">380…480 V units</td></tr>
<tr><td>IR comp (V)</td><td>14</td><td>14</td><td>5.6</td><td>8.4</td><td>7</td></tr>
</table>
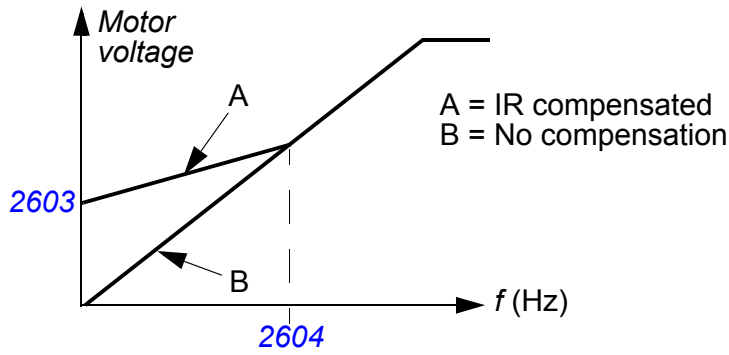
</td><td>Type dependent</td></tr>
<tr><td></td><td>0.0…100.0 V</td><td>Voltage boost</td><td>1 = 0.1 V</td></tr>
<tr><td>2604</td><td>IR COMP FREQ</td><td>Defines the frequency at which the IR compensation is 0 V. See the figure for parameter 2603 IR COMP VOLT
Note: If parameter 2605 U/F RATIO is set to USER DEFINED, this parameter is not active. The IR compensation frequency is set by parameter 2610 USER DEFINED U1.</td><td>80%</td></tr>
<tr><td></td><td>0…100%</td><td>Value in percent of the motor frequency</td><td>1 = 1%</td></tr>
<tr><td>2605</td><td>U/F RATIO</td><td>Selects the voltage to frequency (U/f) ratio below the field weakening point. For scalar control only.</td><td>LINEAR</td></tr>
<tr><td></td><td>LINEAR</td><td>Linear ratio for constant torque applications.</td><td>1</td></tr>
<tr><td></td><td>SQUARED</td><td>Squared ratio for centrifugal pump and fan applications. With squared U/f ratio the noise level is lower for most operating frequencies. Not recommended for permanent magnet motors.</td><td>2</td></tr>
<tr><td></td><td>USER DEFINED</td><td>Custom ratio defined by parameters 2610…2618. See section Custom U/f ratio on page 141.</td><td>3</td></tr>
</table>

All parameters			
No.	**Name/Value**	**Description**	**Def/FbEq**
2606	SWITCHING FREQ	Defines the switching frequency of the drive. Higher switching frequency results in lower acoustic noise. In multimotor systems, do not change the switching frequency from the default value. See also parameter *2607 SWITCH FREQ CTRL* and section *Switching frequency derating, I2N* on page *360*.	4 kHz
	4 kHz		1 = 1 kHz
	8 kHz		
	12 kHz		
	16 kHz		
2607	SWITCH FREQ CTRL	Selects the control method for the switching frequency. Selection has no effect if parameter *2606 SWITCHING FREQ* is 4 kHz.	*ON (LOAD)*
	ON	Drive maximum current is automatically derated according to the selected switching frequency (see parameter *2607 SWITCH FREQ CTRL* and section *Switching frequency derating, I2N* on page *360*) and adapted according to the drive temperature. It is recommended to use this selection when a specific switching frequency is required with maximum performance. 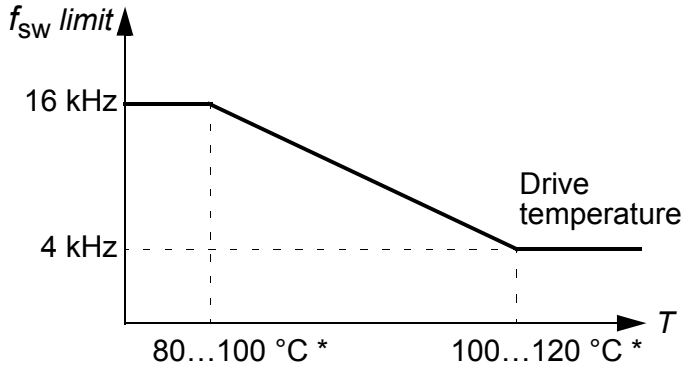 * Temperature depends on the drive output frequency.	1

All parameters			
No.	**Name/Value**	**Description**	**Def/FbEq**
	ON (LOAD)	The drive is started with 4 kHz switching frequency to gain maximum output during the start. After start-up, the switching frequency is controlled towards the selected value (parameter *2607 SWITCH FREQ CTRL*) if the output current or the temperature allows. This selection provides adaptive switching frequency control. Adaptation decreases the output performance in some cases. 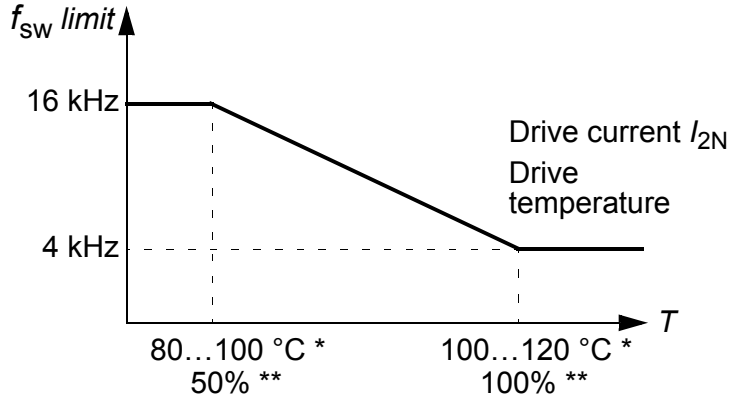 * Temperature depends on the drive output frequency. ** Short term overloading is allowed with each switching frequency depending on actual loading.	2
2608	SLIP COMP RATIO	Defines the slip gain for the motor slip compensation control. 100% means full slip compensation, 0% means no slip compensation. Other values can be used if a static speed error is detected despite the full slip compensation. Can be used only in scalar control (ie when parameter *9904 MOTOR CTRL MODE* setting is *SCALAR: FREQ*). **Example:** 35 Hz constant speed reference is given to the drive. Despite the full slip compensation (*SLIP COMP RATIO* = 100%), a manual tachometer measurement from the motor axis gives a speed value of 34 Hz. The static speed error is 35 Hz - 34 Hz = 1 Hz. To compensate the error, the slip gain should be increased.	0%
	0…200%	Slip gain	1 = 1%
2609	NOISE SMOOTHING	Enables the noise smoothing function. Noise smoothing distributes the acoustic motor noise over a range of frequencies instead of a single tonal frequency resulting in lower peak noise intensity. A random component with an average of 0 Hz is added to the switching frequency set by parameter *2606 SWITCHING FREQ*. **Note:** Parameter has no effect if parameter *2606 SWITCHING FREQ* is set to 16 kHz.	*DISABLE*
	DISABLE	Disabled	0
	ENABLE	Enabled	1

All parameters			
No.	**Name/Value**	**Description**	**Def/FbEq**
2610	USER DEFINED U1	Defines the first voltage point of the custom U/f curve at the frequency defined by parameter *2611 USER DEFINED F1*. See section *Custom U/f ratio* on page *141*.	19% of U_N
	0…120% of U_N V	Voltage	1 = 1 V
2611	USER DEFINED F1	Defines the first frequency point of the custom U/f curve.	10.0 Hz
	0.0…500.0 Hz	Frequency	1 = 0.1 Hz
2612	USER DEFINED U2	Defines the second voltage point of the custom U/f curve at the frequency defined by parameter *2613 USER DEFINED F2*. See section *Custom U/f ratio* on page *141*.	38% of U_N
	0…120% of U_N V	Voltage	1 = 1 V
2613	USER DEFINED F2	Defines the second frequency point of the custom U/f curve.	20.0 Hz
	0.0…500.0 Hz	Frequency	1 = 0.1 Hz
2614	USER DEFINED U3	Defines the third voltage point of the custom U/f curve at the frequency defined by parameter *2615 USER DEFINED F3*. See section *Custom U/f ratio* on page *141*.	47.5% of U_N
	0…120% of U_N V	Voltage	1 = 1 V
2615	USER DEFINED F3	Defines the third frequency point of the custom U/f curve.	25.0 Hz
	0.0…500.0 Hz	Frequency	1 = 0.1 Hz
2616	USER DEFINED U4	Defines the fourth voltage point of the custom U/f curve at the frequency defined by parameter *2617 USER DEFINED F4*. See section *Custom U/f ratio* on page *141*.	76% of U_N
	0…120% of U_N V	Voltage	1 = 1 V
2617	USER DEFINED F4	Defines the fourth frequency point of the custom U/f curve.	40.0 Hz
	0.0…500.0 Hz	Frequency	1 = 0.1 Hz
2618	FW VOLTAGE	Defines the voltage of the U/f curve when frequency is equal to or exceeds the motor nominal frequency (*9907 MOTOR NOM FREQ*). See section *Custom U/f ratio* on page *141*.	95% of U_N
	0…120% of U_N V	Voltage	1 = 1 V
2619	DC STABILIZER	Enables or disables the DC voltage stabilizer. The DC stabilizer is used to prevent possible voltage oscillations in the drive DC bus caused by motor load or weak supply network. In case of voltage variation, the drive tunes the frequency reference to stabilize the DC bus voltage and therefore the load torque oscillation.	*DISABLE*
	DISABLE	Disabled	0
	ENABLE	Enabled	1

All parameters			
No.	**Name/Value**	**Description**	**Def/FbEq**
2621	SMOOTH START	Selects the forced current vector rotation mode at low speeds. When the smooth start mode is selected, the rate of acceleration is limited by the acceleration and deceleration ramp times (parameters *2202* and *2203*). If the process driven by the permanent magnet motor has high inertia, slow ramp times are recommended. Can be used for permanent magnet motors only.	*NO*
	NO	Disabled	0
	YES	Enabled	1
2622	SMOOTH START CUR	Current used in the current vector rotation at low speeds. Increase the smooth start current if the application requires high pull-up torque. Decrease the smooth start current if motor shaft swinging needs to be minimized. Note that accurate torque control is not possible in the current vector rotation mode. Can be used for permanent magnet motors only.	50%
	10…100%	Value in percent of the motor nominal current	1 = 1%
2623	SMOOTH START FRQ	Output frequency up to which the current vector rotation is used. Can be used for permanent magnet motors only.	10%
	2…100%	Value in percent of the motor nominal frequency	1 = 1%
29 MAINTENANCE TRIG		Maintenance triggers	
2901	COOLING FAN TRIG	Defines the trigger point for the drive cooling fan run time counter. Value is compared to parameter *2902 COOLING FAN ACT* value.	0.0 kh
	0.0…6553.5 kh	Time. If parameter value is set to zero, the trigger is disabled.	1 = 0.1 kh
2902	COOLING FAN ACT	Defines the actual value for the cooling fan run time counter. When parameter *2901 COOLING FAN TRIG* has been set to a non zero value, the counter starts. When the actual value of the counter exceeds the value defined by parameter *2901*, a maintenance notice is displayed on the panel.	0.0 kh
	0.0…6553.5 kh	Time. Parameter is reset by setting it to zero.	1 = 0.1 kh
2903	REVOLUTION TRIG	Defines the trigger point for the motor revolution counter. Value is compared to parameter *2904 REVOLUTION ACT* value.	0 Mrev
	0…65535 Mrev	Millions of revolutions. If parameter value is set to zero, the trigger is disabled.	1 = 1 Mrev

All parameters			
No.	**Name/Value**	**Description**	**Def/FbEq**
2904	REVOLUTION ACT	Defines the actual value for the motor revolution counter. When parameter *2903 REVOLUTION TRIG* has been set to a non zero value, the counter starts. When the actual value of the counter exceeds the value defined by parameter *2903*, a maintenance notice is displayed on the panel.	0 Mrev
	0…65535 Mrev	Millions of revolutions. Parameter is reset by setting it to zero.	1 = 1 Mrev
2905	RUN TIME TRIG	Defines the trigger point for the drive run time counter. Value is compared to parameter *2906 RUN TIME ACT* value.	0.0 kh
	0.0…6553.5 kh	Time. If parameter value is set to zero, the trigger is disabled.	1 = 0.1 kh
2906	RUN TIME ACT	Defines the actual value for the drive run time counter. When parameter *2905 RUN TIME TRIG* has been set to a non zero value, the counter starts. When the actual value of the counter exceeds the value defined by parameter *2905*, a maintenance notice is displayed on the panel.	0.0 kh
	0.0…6553.5 kh	Time. Parameter is reset by setting it to zero.	1 = 0.1 kh
2907	USER MWh TRIG	Defines the trigger point for the drive power consumption counter. Value is compared to parameter *2908 USER MWh ACT* value.	0.0 MWh
	0.0… 6553.5 MWh	Megawatt hours. If parameter value is set to zero, the trigger is disabled.	1 = 0.1 MWh
2908	USER MWh ACT	Defines the actual value of the drive power consumption counter. When parameter *2907 USER MWh TRIG* has been set to a non zero value, the counter starts. When the actual value of the counter exceeds the value defined by parameter *2907*, a maintenance notice is displayed on the panel.	0.0 MWh
	00.0… 6553.5 MWh	Megawatt hours. Parameter is reset by setting it to zero.	1 = 0.1 MWh
30 FAULT FUNCTIONS		Programmable protection functions	
3001	AI<MIN FUNCTION	Defines the drive response if the analog input (AI) signal drops below the fault limits and AI is used • as the active reference source (group *11 REFERENCE SELECT*) • as the process or external PID controllers' feedback or setpoint source (group *40 PROCESS PID SET 1*, *41 PROCESS PID SET 2* or *42 EXT / TRIM PID*) and the corresponding PID controller is active. *3021 AI1 FAULT LIMIT* and *3022 AI2 FAULT LIMIT* set the fault limits.	*NOT SEL*
	NOT SEL	Protection is inactive.	0

All parameters			
No.	**Name/Value**	**Description**	**Def/FbEq**
	FAULT	The drive trips on fault *AI1 LOSS* (*0007*) / *AI2 LOSS* (*0008*) and the motor coasts to stop. Fault limit is defined by parameter *3021 AI1 FAULT LIMIT* / *3022 AI2 FAULT LIMIT*.	1
	CONST SP 7	The drive generates alarm *AI1 LOSS* (*2006*) / *AI2 LOSS* (*2007*) and sets the speed to the value defined by parameter *1208 CONST SPEED 7*. Alarm limit is defined by parameter *3021 AI1 FAULT LIMIT* / *3022 AI2 FAULT LIMIT*. **WARNING!** Make sure that it is safe to continue operation in case the analog input signal is lost.	2
	LAST SPEED	The drive generates alarm *AI1 LOSS* (*2006*) / *AI2 LOSS* (*2007*) and freezes the speed to the level the drive was operating at. The speed is determined by the average speed over the previous 10 seconds. Alarm limit is defined by parameter *3021 AI1 FAULT LIMIT* / *3022 AI2 FAULT LIMIT*. **WARNING!** Make sure that it is safe to continue operation in case the analog input signal is lost.	3
3002	PANEL COMM ERR	Selects how the drive reacts to a control panel communication break. **Note:** When either of the two external control locations are active, and start, stop and/or direction are through the control panel – *1001 EXT1 COMMANDS* / *1002 EXT2 COMMANDS* = 8 (*KEYPAD*) – the drive follows the speed reference according to the configuration of the external control locations, instead of the value of the last speed or parameter *1208 CONST SPEED 7*.	*FAULT*
	FAULT	Drive trips on fault *PANEL LOSS* (*0010*) and the motor coasts to stop.	1
	CONST SP 7	The drive generates alarm *PANEL LOSS* (*2008*) and sets the speed to the speed defined by parameter *1208 CONST SPEED 7*. **WARNING!** Make sure that it is safe to continue operation in case of a panel communication break.	2
	LAST SPEED	The drive generates alarm *PANEL LOSS* (*2008*) and freezes the speed to the level the drive was operating at. The speed is determined by the average speed over the previous 10 seconds. **WARNING!** Make sure that it is safe to continue operation in case of a panel communication break.	3
3003	EXTERNAL FAULT 1	Selects an interface for an external fault 1 signal.	*NOT SEL*
	NOT SEL	Not selected	0
	DI1	External fault indication through digital input DI1. 1: Fault trip on *EXT FAULT 1* (*0014*). Motor coasts to stop. 0: No external fault.	1

All parameters			
No.	**Name/Value**	**Description**	**Def/FbEq**
	DI2	See selection *DI1*.	2
	DI3	See selection *DI1*.	3
	DI4	See selection *DI1*.	4
	DI5	See selection *DI1*.	5
	DI1(INV)	External fault indication through inverted digital input DI1. 0: Fault trip on *EXT FAULT 1* (*0014*). Motor coasts to stop. 1: No external fault.	-1
	DI2(INV)	See selection *DI1(INV)*.	-2
	DI3(INV)	See selection *DI1(INV)*.	-3
	DI4(INV)	See selection *DI1(INV)*.	-4
	DI5(INV)	See selection *DI1(INV)*.	-5
3004	EXTERNAL FAULT 2	Selects an interface for an external fault 2 signal.	*NOT SEL*
		See parameter *3003 EXTERNAL FAULT 1*.	
3005	MOT THERM PROT	Selects how the drive reacts when the motor overtemperature is detected.	*FAULT*
	NOT SEL	Protection is inactive.	0
	FAULT	The drive trips on fault *MOT OVERTEMP* (*0009*) when the temperature exceeds 110 °C, and the motor coasts to stop.	1
	ALARM	The drive generates alarm *MOTOR TEMP* (*2010*) when the motor temperature exceeds 90 °C.	2
3006	MOT THERM TIME	Defines the thermal time constant for the motor thermal model, ie the time within which the motor temperature has reached 63% of the nominal temperature with steady load. For thermal protection according to UL requirements for NEMA class motors, use the rule of thumb: Motor thermal time = 35 · t6. t6 (in seconds) is specified by the motor manufacturer as the time the motor can safely operate at six times its rated current. Thermal time for a Class 10 trip curve is 350 s, for a Class 20 trip curve 700 s, and for a Class 30 trip curve 1050 s. 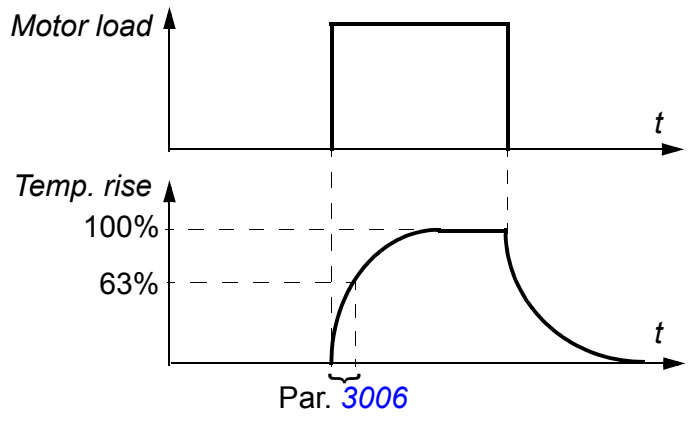	500 s
	256…9999 s	Time constant	1 = 1 s

All parameters			
No.	**Name/Value**	**Description**	**Def/FbEq**
3007	MOT LOAD CURVE	Defines the load curve together with parameters *3008 ZERO SPEED LOAD* and *3009 BREAK POINT FREQ*. With the default value 100%, motor overload protection is functioning when the constant current exceeds 127% of the parameter *9906 MOTOR NOM CURR* value. The default overloadability is at the same level as what motor manufacturers typically allow below 30 °C (86 °F) ambient temperature and below 1000 m (3300 ft) altitude. When the ambient temperature exceeds 30 °C (86 °F) or the installation altitude is over 1000 m (3300 ft), decrease the parameter *3007* value according to the motor manufacturer's recommendation. **Example:** If the constant protection level needs to be 115% of the motor nominal current, set parameter *3007* value to 91% (= 115/127·100%). 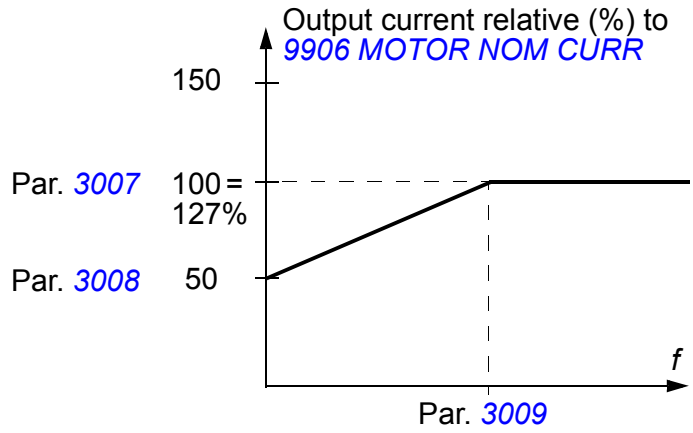	100%
	50.…150%	Allowed continuous motor load relative to the nominal motor current	1 = 1%
3008	ZERO SPEED LOAD	Defines the load curve together with parameters *3007 MOT LOAD CURVE* and *3009 BREAK POINT FREQ*.	70%
	25.…150%	Allowed continuous motor load at zero speed in percent of the nominal motor current	1 = 1%

All parameters			
No.	**Name/Value**	**Description**	**Def/FbEq**
3009	BREAK POINT FREQ	Defines the load curve together with parameters *3007 MOT LOAD CURVE* and *3008 ZERO SPEED LOAD*. **Example:** Thermal protection trip times when parameters *3006*…*3008* have default values. I_O = Output current I_N = Nominal motor current f_O = Output frequency f_{BRK} = Break point frequency A = Trip time 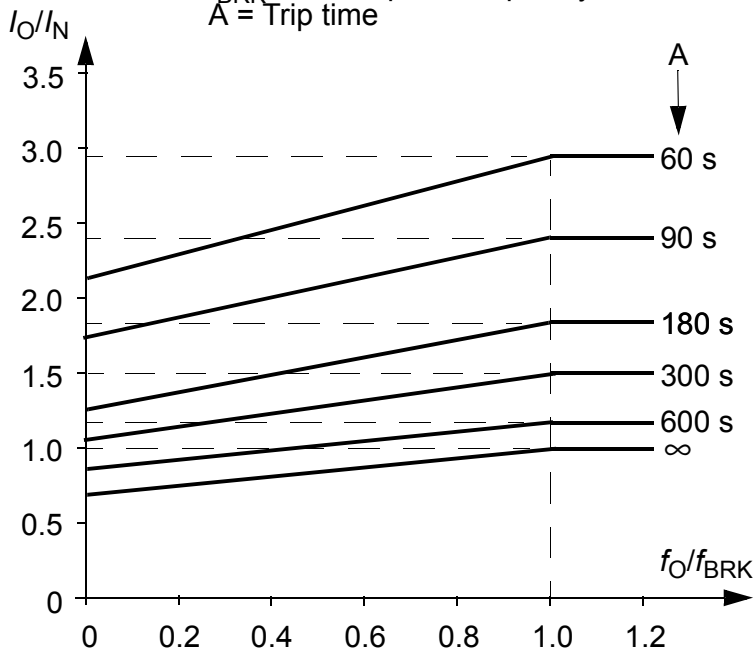	35 Hz
1…250 Hz		Drive output frequency at 100% load	1 = 1 Hz

All parameters			
No.	**Name/Value**	**Description**	**Def/FbEq**
3010	STALL FUNCTION	Selects how the drive reacts to a motor stall condition. The protection wakes up if the drive has operated in a stall region (see the figure below) longer than the time set by parameter *3012 STALL TIME*. In vector control the user defined limit = *2017 MAX TORQUE 1* / *2018 MAX TORQUE 2* (applies for positive and negative torques). In scalar control the user defined limit = *2003 MAX CURRENT*. The control mode is selected by parameter *9904 MOTOR CTRL MODE*. 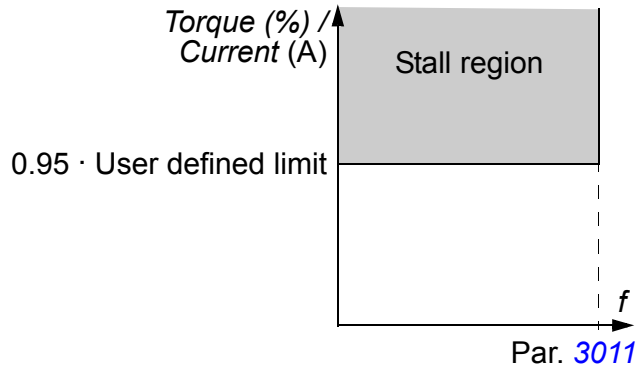	*NOT SEL*
	NOT SEL	Protection is inactive.	0
	FAULT	The drive trips on fault *MOTOR STALL* (*0012*) and the motor coasts to stop.	1
	ALARM	The drive generates alarm *MOTOR STALL* (*2012*).	2
3011	STALL FREQUENCY	Defines the frequency limit for the stall function. See parameter *3010 STALL FUNCTION*.	20.0 Hz
	0.5…50.0 Hz	Frequency	1 = 0.1 Hz
3012	STALL TIME	Defines the time for the stall function. See parameter *3010 STALL FUNCTION*.	20 s
	10…400 s	Time	1 = 1 s
3013	UNDERLOAD FUNC	Selects how the drive reacts to underload. The protection wakes up if: • the motor torque falls below the curve selected by parameter *3015 UNDERLOAD CURVE*, • output frequency is higher than 10% of the nominal motor frequency and • the above conditions have been valid longer than the time set by parameter *3014 UNDERLOAD TIME*.	*NOT SEL*
	NOT SEL	Protection is inactive.	0

All parameters			
No.	**Name/Value**	**Description**	**Def/FbEq**
	FAULT	The drive trips on fault *UNDERLOAD* (*0017*) and the motor coasts to stop. **Note:** Set parameter value to *FAULT* only after the drive ID run is performed! If *FAULT* is selected, the drive may generate an *UNDERLOAD* fault during ID run.	1
	ALARM	The drive generates alarm *UNDERLOAD* (*2011*).	2
3014	UNDERLOAD TIME	Defines the time limit for the underload function. See parameter *3013 UNDERLOAD FUNC*.	20 s
	10…400 s	Time limit	1 = 1 s
3015	UNDERLOAD CURVE	Selects the load curve for the underload function. See parameter *3013 UNDERLOAD FUNC*. T_M = nominal torque of the motor f_N = nominal frequency of the motor (*9907*) 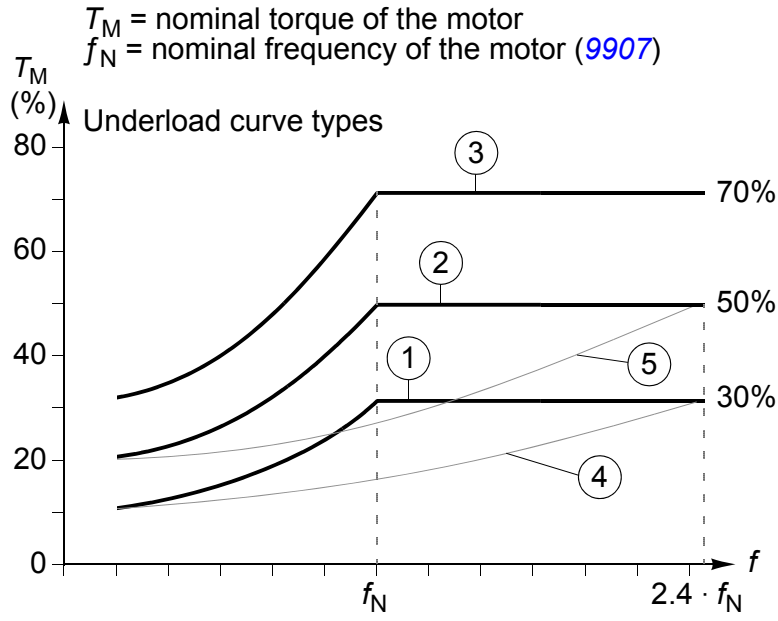	1
	1…5	Number of the load curve type in the figure	1 = 1
3016	SUPPLY PHASE	Selects how the drive reacts to supply phase loss, ie when DC voltage ripple is excessive.	*FAULT*
	FAULT	The drive trips on fault *SUPPLY PHASE* (*0022*) and the motor coasts to stop when the DC voltage ripple exceeds 14% of the nominal DC voltage.	0
	LIMIT/ALARM	Drive output current is limited and alarm *INPUT PHASE LOSS* (*2026*) is generated when the DC voltage ripple exceeds 14% of the nominal DC voltage. There is a 10 s delay between the activation of the alarm and the output current limitation. The current is limited until the ripple drops under the minimum limit, 0.3 · I_{hd}.	1
	ALARM	The drive generates alarm *INPUT PHASE LOSS* (*2026*) when the DC ripple exceeds 14% of the nominal DC voltage.	2

All parameters			
No.	**Name/Value**	**Description**	**Def/FbEq**
3017	EARTH FAULT	Selects how the drive reacts when an earth (ground) fault is detected in the motor or the motor cable. **Note:** Disabling earth (ground) fault may void the warranty.	*ENABLE*
	DISABLE	No action	0
	ENABLE	The drive trips on fault *EARTH FAULT* (*0016*) when the earth fault is detected during run.	1
	START ONLY	The drive trips on fault *EARTH FAULT* (*0016*) when the earth fault is detected before run.	2
3018	COMM FAULT FUNC	Selects how the drive reacts in a fieldbus communication break. The time delay is defined by parameter *3019 COMM FAULT TIME*.	*NOT SEL*
	NOT SEL	Protection is inactive.	0
	FAULT	Protection is active. The drive trips on fault *SERIAL 1 ERR* (*0028*) and coasts to stop.	1
	CONST SP 7	Protection is active. The drive generates alarm *IO COMM* (*2005*) and sets the speed to the value defined by parameter *1208 CONST SPEED 7*. **WARNING!** Make sure that it is safe to continue operation in case of a communication break.	2
	LAST SPEED	Protection is active. The drive generates alarm *IO COMM* (*2005*) and freezes the speed to the level the drive was operating at. The speed is determined by the average speed over the previous 10 seconds. **WARNING!** Make sure that it is safe to continue operation in case of a communication break.	3
3019	COMM FAULT TIME	Defines the time delay for the fieldbus communication break supervision. See parameter *3018 COMM FAULT FUNC*.	3.0 s
	0.0…600.0 s	Delay time	1 = 0.1 s
3021	AI1 FAULT LIMIT	Defines a fault level for analog input AI1. If parameter *3001 AI<MIN FUNCTION* is set to *FAULT*, the drive trips on fault *AI1 LOSS* (*0007*) when the analog input signal falls below the set level. Do not set this limit below the level defined by parameter *1301 MINIMUM AI1*.	0.0%
	0.0…100.0%	Value in percent of the full signal range	1 = 0.1%
3022	AI2 FAULT LIMIT	Defines a fault level for analog input AI2. If parameter *3001 AI<MIN FUNCTION* is set to *FAULT*, the drive trips on fault *AI2 LOSS* (*0008*) when the analog input signal falls below the set level. Do not set this limit below the level defined by parameter *1304 MINIMUM AI2*.	0.0%
	0.0…100.0%	Value in percent of the full signal range	1 = 0.1%

All parameters			
No.	**Name/Value**	**Description**	**Def/FbEq**
3023	WIRING FAULT	Selects how the drive reacts when incorrect input power and motor cable connection is detected (ie the input power cable is connected to the motor connection of the drive). **Note:** Disabling wiring fault (ground fault) may void the warranty.	*ENABLE*
	DISABLE	No action	0
	ENABLE	The drive trips on fault *OUTP WIRING* (*0035*).	1
3025	STO OPERATION	Selects how the drive reacts when the drive detects that the STO (Safe torque off) function is active.	*ONLY ALARM*
	ONLY FAULT	The drive trips on fault *SAFE TORQUE OFF* (*0044*).	1
	ALARM&FAULT	The drive generates alarm *SAFE TORQUE OFF* (*2035*) when stopped and trips on fault *SAFE TORQUE OFF* (*0044*) when running.	2
	NO & FAULT	The drive gives no indication to the user when stopped and trips on fault *SAFE TORQUE OFF* (*0044*) when running.	3
	ONLY ALARM	The drive generates alarm *SAFE TORQUE OFF* (*2035*). **Note:** The start signal must be reset (toggled to 0) if STO (Safe torque off) has been used while the drive has been running.	4
3026	POWER FAIL START	Selects how the drive reacts when the control board is externally powered by the MPOW-01 option module (see *Appendix: Extension modules* on page *393*) and start is requested by the user.	*ALARM*
	ALARM	The drive generates alarm *UNDERVOLTAGE* (*2003*).	1
	FAULT	The drive trips on fault *DC UNDERVOLT* (*0006*).	2
	NO	The drive gives no indication to the user.	3
31 AUTOMATIC RESET		Automatic fault reset. Automatic resets are possible only for certain fault types and when the automatic reset function is activated for that fault type.	
3101	NR OF TRIALS	Defines the number of automatic fault resets the drive performs within the time defined by parameter *3102 TRIAL TIME*. If the number of automatic resets exceeds the set number (within the trial time), the drive prevents additional automatic resets and remains stopped. The drive must be reset from the control panel or from a source selected by parameter *1604 FAULT RESET SEL*. **Example:** Three faults have occurred during the trial time defined by parameter *3102*. Last fault is reset only if the number defined by parameter *3101* is 3 or more. 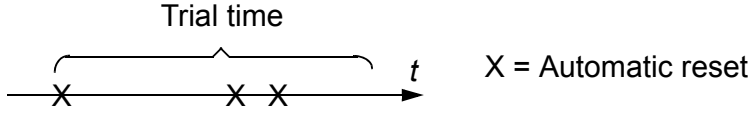	0

All parameters			
No.	**Name/Value**	**Description**	**Def/FbEq**
	0…5	Number of the automatic resets	1 = 1
3102	TRIAL TIME	Defines the time for the automatic fault reset function. See parameter *3101 NR OF TRIALS*.	30.0 s
	1.0…600.0 s	Time	1 = 0.1 s
3103	DELAY TIME	Defines the time that the drive will wait after a fault before attempting an automatic reset. See parameter *3101 NR OF TRIALS*. If delay time is set to zero, the drive resets immediately.	0.0 s
	0.0…120.0 s	Time	1 = 0.1 s
3104	AR OVERCURRENT	Activates/deactivates the automatic reset for the overcurrent fault. Automatically resets fault *OVERCURRENT* (*0001*) after the delay set by parameter *3103 DELAY TIME*.	*DISABLE*
	DISABLE	Inactive	0
	ENABLE	Active	1
3105	AR OVERVOLTAGE	Activates/deactivates the automatic reset for the intermediate link overvoltage fault. Automatically resets fault *DC OVERVOLT* (*0002*) after the delay set by parameter *3103 DELAY TIME*.	*DISABLE*
	DISABLE	Inactive	0
	ENABLE	Active	1
3106	AR UNDERVOLTAGE	Activates/deactivates the automatic reset for the intermediate link undervoltage fault. Automatically resets fault *DC UNDERVOLT* (*0006*) after the delay set by parameter *3103 DELAY TIME*.	*DISABLE*
	DISABLE	Inactive	0
	ENABLE	Active	1
3107	AR AI<MIN	Activates/deactivates the automatic reset for AI<MIN (analog input signal under the allowed minimum level) faults *AI1 LOSS* (*0007*) and *AI2 LOSS* (*0008*). Automatically resets the fault after the delay set by parameter *3103 DELAY TIME*.	*DISABLE*
	DISABLE	Inactive	0
	ENABLE	Active **WARNING!** The drive may restart even after a long stop if the analog input signal is restored. Ensure that the use of this feature will not cause danger.	1
3108	AR EXTERNAL FLT	Activates/deactivates the automatic reset for faults *EXT FAULT 1* (*0014*) and *EXT FAULT 2* (*0015*). Automatically resets the fault after the delay set by parameter *3103 DELAY TIME*.	*DISABLE*
	DISABLE	Inactive	0
	ENABLE	Active	1

All parameters			
No.	**Name/Value**	**Description**	**Def/FbEq**
32 SUPERVISION		Signal supervision. Supervision status can be monitored with relay or transistor output. See parameter groups *14 RELAY OUTPUTS* and *18 FREQ IN & TRAN OUT*.	
3201	SUPERV 1 PARAM	Selects the first supervised signal. Supervision limits are defined by parameters *3202 SUPERV 1 LIM LO* and *3203 SUPERV 1 LIM HI*. **Example 1**: If *3202 SUPERV 1 LIM LO* ≤ *3203 SUPERV 1 LIM HI* **Case A** = *1401 RELAY OUTPUT 1* value is set to *SUPRV1 OVER*. Relay energizes when value of the signal selected with *3201 SUPERV 1 PARAM* exceeds the supervision limit defined by *3203 SUPERV 1 LIM HI*. The relay remains active until the supervised value drops below the low limit defined by *3202 SUPERV 1 LIM LO*. **Case B** = *1401 RELAY OUTPUT 1* value is set to *SUPRV1 UNDER*. Relay energizes when value of the signal selected with *3201 SUPERV 1 PARAM* drops below the supervision limit defined by *3202 SUPERV 1 LIM LO*. The relay remains active until the supervised value rises above the high limit defined by *3203 SUPERV 1 LIM HI*. 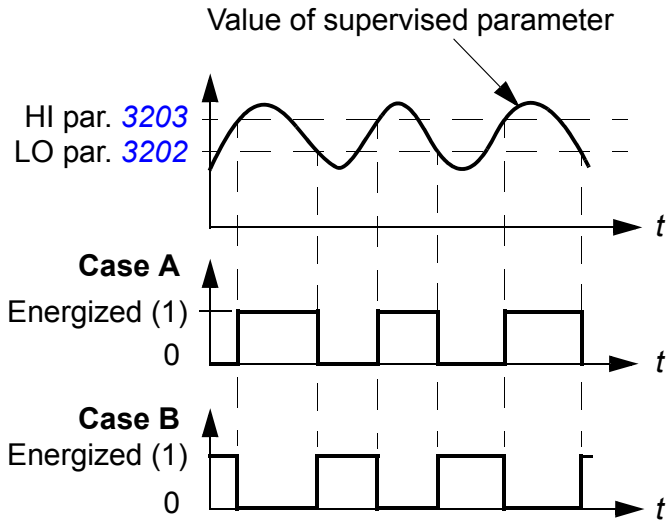 	103

All parameters			
No.	**Name/Value**	**Description**	**Def/FbEq**
		Example 2: If *3202 SUPERV 1 LIM LO* > *3203 SUPERV 1 LIM HI* The lower limit *3203 SUPERV 1 LIM HI* remains active until the supervised signal exceeds the higher limit *3202 SUPERV 1 LIM LO*, making it the active limit. The new limit remains active until the supervised signal drops below the lower limit *3203 SUPERV 1 LIM HI*, making it the active limit. **Case A** = *1401 RELAY OUTPUT 1* value is set to *SUPRV1 OVER*. Relay is energized whenever the supervised signal exceeds the active limit. **Case B** = *1401 RELAY OUTPUT 1* value is set to *SUPRV1 UNDER*. Relay is de-energized whenever the supervised signal drops below the active limit. 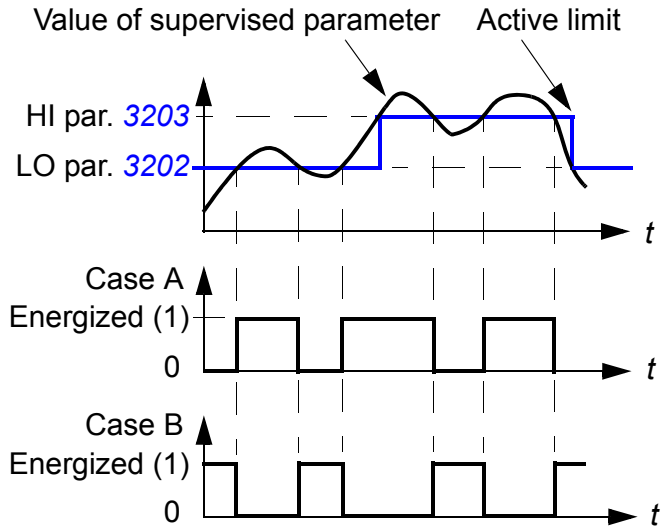	
	0, x…x	Parameter index in group *01 OPERATING DATA*. Eg 102 = *0102 SPEED*. 0 = not selected.	1 = 1
3202	SUPERV 1 LIM LO	Defines the low limit for the first supervised signal selected by parameter *3201 SUPERV 1 PARAM*. Supervision wakes up if the value is below the limit.	-
	x…x	Setting range depends on parameter *3201* setting.	-
3203	SUPERV 1 LIM HI	Defines the high limit for the first supervised signal selected by parameter *3201 SUPERV 1 PARAM*. Supervision wakes up if the value is above the limit.	-
	x…x	Setting range depends on parameter *3201* setting.	-
3204	SUPERV 2 PARAM	Selects the second supervised signal. Supervision limits are defined by parameters *3205 SUPERV 2 LIM LO* and *3206 SUPERV 2 LIM HI*. See parameter *3201 SUPERV 1 PARAM*.	104
	x…x	Parameter index in group *01 OPERATING DATA*. Eg 102 = *0102 SPEED*.	1 = 1

All parameters			
No.	**Name/Value**	**Description**	**Def/FbEq**
3205	SUPERV 2 LIM LO	Defines the low limit for the second supervised signal selected by parameter *3204 SUPERV 2 PARAM*. Supervision wakes up if the value is below the limit.	-
	x…x	Setting range depends on parameter *3204* setting.	-
3206	SUPERV 2 LIM HI	Defines the high limit for the second supervised signal selected by parameter *3204 SUPERV 2 PARAM*. Supervision wakes up if the value is above the limit.	-
	x…x	Setting range depends on parameter *3204* setting.	-
3207	SUPERV 3 PARAM	Selects the third supervised signal. Supervision limits are defined by parameters *3208 SUPERV 3 LIM LO* and *3209 SUPERV 3 LIM HI*. See parameter *3201 SUPERV 1 PARAM*.	105
	x…x	Parameter index in group *01 OPERATING DATA*. Eg 102 = *0102 SPEED*.	1 = 1
3208	SUPERV 3 LIM LO	Defines the low limit for the third supervised signal selected by parameter *3207 SUPERV 3 PARAM*. Supervision wakes up if the value is below the limit.	-
	x…x	Setting range depends on parameter *3207* setting.	-
3209	SUPERV 3 LIM HI	Defines the high limit for the third supervised signal selected by parameter *3207 SUPERV 3 PARAM*. Supervision wakes up if the value is above the limit.	-
	x…x	Setting range depends on parameter *3207* setting.	-
33 INFORMATION		Firmware package version, test date etc.	
3301	FIRMWARE	Displays the version of the firmware package.	
	0000…FFFF hex	Eg 241A hex	
3302	LOADING PACKAGE	Displays the version of the loading package.	type dependent
	2201…22FF hex	2201 hex = ACS355-0nE- 2202 hex = ACS355-0nU-	
3303	TEST DATE	Displays the test date.	00.00
		Date value in format YY.WW (year, week)	
3304	DRIVE RATING	Displays the drive current and voltage ratings.	0000 hex
	0000…FFFF hex	Value in format XXXY hex: XXX = Nominal current of the drive in amperes. An “A” indicates decimal point. For example if XXX is 9A8, nominal current is 9.8 A. Y = Nominal voltage of the drive: 1 = 1-phase 200…240 V 2 = 3-phase 200…240 V 4 = 3-phase 380…480 V	
3305	PARAMETER TABLE	Displays the version of the parameter table used in the drive.	

All parameters			
No.	**Name/Value**	**Description**	**Def/FbEq**
	0000…FFFF hex	Eg 400E hex	
34 PANEL DISPLAY		Selection of actual signals to be displayed on the panel	
3401	SIGNAL1 PARAM	Selects the first signal to be displayed on the control panel in the Output mode. Assistant control panel 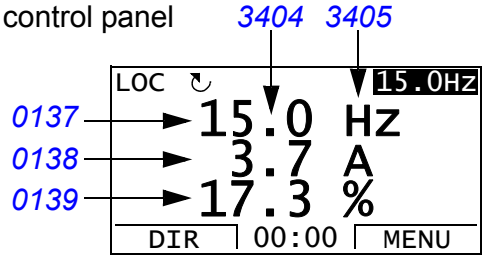	103
	0 = NOT SELECTED 101…180	Parameter index in group *01 OPERATING DATA*. Eg 102 = *0102 SPEED*. If value is set to 0, no signal is selected.	1 = 1
3402	SIGNAL1 MIN	Defines the minimum value for the signal selected by parameter *3401 SIGNAL1 PARAM*. 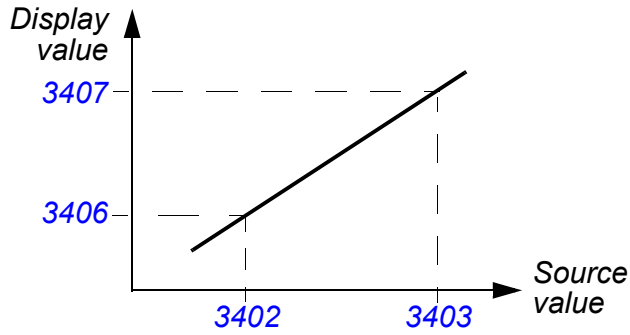 **Note:** Parameter is not effective if parameter *3404 OUTPUT1 DSP FORM* setting is *DIRECT*.	-
	x…x	Setting range depends on parameter *3401* setting.	-
3403	SIGNAL1 MAX	Defines the maximum value for the signal selected by parameter *3401 SIGNAL1 PARAM*. See the figure for parameter *3402 SIGNAL1 MIN*. **Note:** Parameter is not effective if parameter *3404 OUTPUT1 DSP FORM* setting is *DIRECT*.	-
	x…x	Setting range depends on parameter *3401* setting.	-

<table>
<tr><th colspan="4">All parameters</th></tr>
<tr><th>No.</th><th>Name/Value</th><th>Description</th><th>Def/FbEq</th></tr>
<tr><td>3404</td><td>OUTPUT1 DSP FORM</td><td>Defines the format for the displayed signal (selected by parameter 3401 SIGNAL1 PARAM).</td><td>DIRECT</td></tr>
<tr><td></td><td>+/-0</td><td rowspan="8">Signed/Unsigned value. Unit is selected by parameter 3405 OUTPUT1 UNIT.
Example: PI (3.14159)
<table><tr><th>3404 value</th><th>Display</th><th>Range</th></tr><tr><td>+/-0</td><td>± 3</td><td rowspan="4">-32768…+32767</td></tr><tr><td>+/-0.0</td><td>± 3.1</td></tr><tr><td>+/-0.00</td><td>± 3.14</td></tr><tr><td>+/-0.000</td><td>± 3.142</td></tr><tr><td>+0</td><td>3</td><td rowspan="4">0…65535</td></tr><tr><td>+0.0</td><td>3.1</td></tr><tr><td>+0.00</td><td>3.14</td></tr><tr><td>+0.000</td><td>3.142</td></tr></table></td><td>0</td></tr>
<tr><td></td><td>+/-0.0</td><td>1</td></tr>
<tr><td></td><td>+/-0.00</td><td>2</td></tr>
<tr><td></td><td>+/-0.000</td><td>3</td></tr>
<tr><td></td><td>+0</td><td>4</td></tr>
<tr><td></td><td>+0.0</td><td>5</td></tr>
<tr><td></td><td>+0.00</td><td>6</td></tr>
<tr><td></td><td>+0.000</td><td>7</td></tr>
<tr><td></td><td>BAR METER</td><td>Bar graph</td><td>8</td></tr>
<tr><td></td><td>DIRECT</td><td>Direct value. Decimal point location and units of measure are the same as for the source signal.
Note: Parameters 3402, 3403 and 3405…3407 are not effective.</td><td>9</td></tr>
<tr><td>3405</td><td>OUTPUT1 UNIT</td><td>Selects the unit for the displayed signal selected by parameter 3401 SIGNAL1 PARAM.
Note: Parameter is not effective if parameter 3404 OUTPUT1 DSP FORM setting is DIRECT.
Note: Unit selection does not convert values.</td><td>Hz</td></tr>
<tr><td></td><td>NO UNIT</td><td>No unit selected</td><td>0</td></tr>
<tr><td></td><td>A</td><td>ampere</td><td>1</td></tr>
<tr><td></td><td>V</td><td>volt</td><td>2</td></tr>
<tr><td></td><td>Hz</td><td>hertz</td><td>3</td></tr>
<tr><td></td><td>%</td><td>percent</td><td>4</td></tr>
<tr><td></td><td>s</td><td>second</td><td>5</td></tr>
<tr><td></td><td>h</td><td>hour</td><td>6</td></tr>
<tr><td></td><td>rpm</td><td>revolutions per minute</td><td>7</td></tr>
<tr><td></td><td>kh</td><td>kilohour</td><td>8</td></tr>
<tr><td></td><td>°C</td><td>celsius</td><td>9</td></tr>
<tr><td></td><td>lb ft</td><td>pounds per foot</td><td>10</td></tr>
<tr><td></td><td>mA</td><td>milliampere</td><td>11</td></tr>
<tr><td></td><td>mV</td><td>millivolt</td><td>12</td></tr>
<tr><td></td><td>kW</td><td>kilowatt</td><td>13</td></tr>
<tr><td></td><td>W</td><td>watt</td><td>14</td></tr>
<tr><td></td><td>kWh</td><td>kilowatt hour</td><td>15</td></tr>
<tr><td></td><td>°F</td><td>fahrenheit</td><td>16</td></tr>
<tr><td></td><td>hp</td><td>horsepower</td><td>17</td></tr>
</table>

All parameters			
No.	**Name/Value**	**Description**	**Def/FbEq**
	MWh	megawatt hour	18
	m/s	meters per second	19
	m3/h	cubic meters per hour	20
	dm3/s	cubic decimeters per second	21
	bar	bar	22
	kPa	kilopascal	23
	GPM	gallons per minute	24
	PSI	pounds per square inch	25
	CFM	cubic feet per minute	26
	ft	foot	27
	MGD	millions of gallons per day	28
	inHg	inches of mercury	29
	FPM	feet per minute	30
	kb/s	kilobytes per second	31
	kHz	kilohertz	32
	ohm	ohm	33
	ppm	pulses per minute	34
	pps	pulses per second	35
	l/s	liters per second	36
	l/min	liters per minute	37
	l/h	liters per hour	38
	m3/s	cubic meters per second	39
	m3/m	cubic meters per minute	40
	kg/s	kilograms per second	41
	kg/m	kilograms per minute	42
	kg/h	kilograms per hour	43
	mbar	millibar	44
	Pa	pascal	45
	GPS	gallons per second	46
	gal/s	gallons per second	47
	gal/m	gallons per minute	48
	gal/h	gallons per hour	49
	ft3/s	cubic feet per second	50
	ft3/m	cubic feet per minute	51
	ft3/h	cubic feet per hour	52
	lb/s	pounds per second	53
	lb/m	pounds per minute	54
	lb/h	pounds per hour	55
	FPS	feet per second	56
	ft/s	feet per second	57

All parameters			
No.	**Name/Value**	**Description**	**Def/FbEq**
	inH2O	inches of water	58
	in wg	inches of water gauge	59
	ft wg	feet on water gauge	60
	lbsi	pounds per squared inch	61
	ms	millisecond	62
	Mrev	millions of revolutions	63
	d	days	64
	inWC	inches of water column	65
	m/min	meters per minute	66
	Nm	Newton meter	67
	Km3/h	thousand cubic meters per hour	68
	%ref	reference in percentage	117
	%act	actual value in percentage	118
	%dev	deviation in percentage	119
	% LD	load in percentage	120
	% SP	set point in percentage	121
	%FBK	feedback in percentage	122
	Iout	output current (in percentage)	123
	Vout	output voltage	124
	Fout	output frequency	125
	Tout	output torque	126
	Vdc	DC voltage	127
3406	OUTPUT1 MIN	Sets the minimum display value for the signal selected by parameter *3401 SIGNAL1 PARAM*. See parameter *3402 SIGNAL1 MIN*. **Note:** Parameter is not effective if parameter *3404 OUTPUT1 DSP FORM* setting is *DIRECT*.	-
	x…x	Setting range depends on parameter *3401* setting.	-
3407	OUTPUT1 MAX	Sets the maximum display value for the signal selected by parameter *3401 SIGNAL1 PARAM*. See parameter *3402 SIGNAL1 MIN*. **Note:** Parameter is not effective if parameter *3404 OUTPUT1 DSP FORM* setting is *DIRECT*.	-
	x…x	Setting range depends on parameter *3401* setting.	-
3408	SIGNAL2 PARAM	Selects the second signal to be displayed on the control panel in the Output mode. See parameter *3401 SIGNAL1 PARAM*.	104
	0 = NOT SELECTED 101…180	Parameter index in group *01 OPERATING DATA*. Eg 102 = *0102 SPEED*. If value is set to 0, no signal is selected.	1 = 1

All parameters			
No.	**Name/Value**	**Description**	**Def/FbEq**
3409	SIGNAL2 MIN	Defines the minimum value for the signal selected by parameter *3408 SIGNAL2 PARAM*. See parameter *3402 SIGNAL1 MIN*.	-
	x…x	Setting range depends on parameter *3408* setting.	-
3410	SIGNAL2 MAX	Defines the maximum value for the signal selected by parameter *3408 SIGNAL2 PARAM*. See parameter *3402 SIGNAL1 MIN*.	-
	x…x	Setting range depends on parameter *3408* setting.	-
3411	OUTPUT2 DSP FORM	Defines the format for the displayed signal selected by parameter *3408 SIGNAL2 PARAM*.	*DIRECT*
		See parameter *3404 OUTPUT1 DSP FORM*.	-
3412	OUTPUT2 UNIT	Selects the unit for the displayed signal selected by parameter *3408 SIGNAL2 PARAM*.	-
		See parameter *3405 OUTPUT1 UNIT*.	-
3413	OUTPUT2 MIN	Sets the minimum display value for the signal selected by parameter *3408 SIGNAL2 PARAM*. See parameter *3402 SIGNAL1 MIN*.	-
	x…x	Setting range depends on parameter *3408* setting.	-
3414	OUTPUT2 MAX	Sets the maximum display value for the signal selected by parameter *3408 SIGNAL2 PARAM*. See parameter *3402 SIGNAL1 MIN*.	-
	x…x	Setting range depends on parameter *3408* setting.	-
3415	SIGNAL3 PARAM	Selects the third signal to be displayed on the control panel in the Output mode. See parameter *3401 SIGNAL1 PARAM*.	105
	0 = NOT SELECTED 101…180	Parameter index in group *01 OPERATING DATA*. Eg 102 = *0102 SPEED*. If value is set to 0, no signal is selected.	1 = 1
3416	SIGNAL3 MIN	Defines the minimum value for the signal selected by parameter *3415*. See parameter *3402 SIGNAL1 MIN*.	-
	x…x	Setting range depends on parameter *3415 SIGNAL3 PARAM* setting.	-
3417	SIGNAL3 MAX	Defines the maximum value for the signal selected by parameter *3415 SIGNAL3 PARAM*. See parameter *3402 SIGNAL1 MIN*.	-
	x…x	Setting range depends on parameter *3415 SIGNAL3 PARAM* setting.	-
3418	OUTPUT3 DSP FORM	Defines the format for the displayed signal selected by parameter *3415 SIGNAL3 PARAM*.	*DIRECT*
		See parameter *3404 OUTPUT1 DSP FORM*.	-
3419	OUTPUT3 UNIT	Selects the unit for the displayed signal selected by parameter *3415 SIGNAL3 PARAM*.	-
		See parameter *3405 OUTPUT1 UNIT*.	-

All parameters			
No.	**Name/Value**	**Description**	**Def/FbEq**
3420	OUTPUT3 MIN	Sets the minimum display value for the signal selected by parameter *3415 SIGNAL3 PARAM*. See parameter *3402 SIGNAL1 MIN*.	-
	x…x	Setting range depends on parameter *3415 SIGNAL3 PARAM* setting.	-
3421	OUTPUT3 MAX	Sets the maximum display value for the signal selected by parameter *3415 SIGNAL3 PARAM*. See parameter *3402 SIGNAL1 MIN*.	-
	x…x	Setting range depends on parameter *3415* setting.	-
35 MOTOR TEMP MEAS		Motor temperature measurement. See section *Motor temperature measurement through the standard I/O* on page *155*.	
3501	SENSOR TYPE	Activates the motor temperature measurement function and selects the sensor type. See also parameter group *15 ANALOG OUTPUTS*.	*NONE*
	NONE	The function is inactive.	0
	1 x PT100	The function is active. The temperature is measured with one Pt 100 sensor. Analog output AO feeds constant current through the sensor. The sensor resistance increases as the motor temperature rises, as does the voltage over the sensor. The temperature measurement function reads the voltage through analog input AI1/2 and converts it to degrees centigrade.	1
	2 x PT100	The function is active. Temperature is measured using two Pt 100 sensors. See selection *1 x PT100*.	2
	3 x PT100	The function is active. Temperature is measured using three Pt 100 sensors. See selection *1 x PT100*.	3

<table>
<tr><th colspan="4">All parameters</th></tr>
<tr><th>No.</th><th>Name/Value</th><th>Description</th><th>Def/FbEq</th></tr>
<tr><td></td><td>PTC</td><td>The function is active. The temperature is supervised using one PTC sensor. Analog output AO feeds constant current through the sensor. The resistance of the sensor increases sharply as the motor temperature rises over the PTC reference temperature (Tref), as does the voltage over the resistor. The temperature measurement function reads the voltage through analog input AI1/2 and converts it into ohms. The figure below shows typical PTC sensor resistance values as a function of the motor operating temperature.
<table><tr><th>Temperature</th><th>Resistance</th></tr><tr><td>Normal</td><td>0…1.5 kohm</td></tr><tr><td>Excessive</td><td>≥ 4 kohm</td></tr></table> 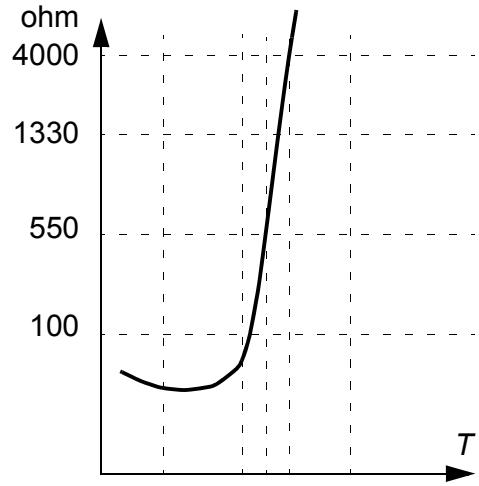
</td><td>4</td></tr>
<tr><td></td><td>THERM(0)</td><td>The function is active. Motor temperature is monitored using a PTC sensor (see selection PTC) connected to drive through a normally closed thermistor relay connected to a digital input. 0 = motor overtemperature.</td><td>5</td></tr>
<tr><td></td><td>THERM(1)</td><td>The function is active. Motor temperature is monitored using a PTC sensor (see selection PTC) connected to drive through a normally open thermistor relay connected to a digital input. 1 = motor overtemperature.</td><td>6</td></tr>
<tr><td>3502</td><td>INPUT SELECTION</td><td>Selects the source for the motor temperature measurement signal.</td><td>AI1</td></tr>
<tr><td></td><td>AI1</td><td>Analog input AI1. Used when PT100 or PTC sensor is selected for the temperature measurement.</td><td>1</td></tr>
<tr><td></td><td>AI2</td><td>Analog input AI2. Used when PT100 or PTC sensor is selected for the temperature measurement</td><td>2</td></tr>
<tr><td></td><td>DI1</td><td>Digital input DI1. Used when parameter 3501 SENSOR TYPE value is set to THERM(0)/THERM(1).</td><td>3</td></tr>
<tr><td></td><td>DI2</td><td>Digital input DI2. Used when parameter 3501 SENSOR TYPE value is set to THERM(0)/THERM(1).</td><td>4</td></tr>
</table>

All parameters			
No.	**Name/Value**	**Description**	**Def/FbEq**
	DI3	Digital input DI3. Used when parameter *3501 SENSOR TYPE* value is set to *THERM(0)*/*THERM(1)*.	5
	DI4	Digital input DI4. Used when parameter *3501 SENSOR TYPE* value is set to *THERM(0)*/*THERM(1)*.	6
	DI5	Digital input DI5. Used when parameter *3501 SENSOR TYPE* value is set to *THERM(0)*/*THERM(1)*.	7
3503	ALARM LIMIT	Defines the alarm limit for motor temperature measurement. Alarm *MOTOR TEMP* (*2010*) indication is given when the limit is exceeded. When parameter *3501 SENSOR TYPE* value is set to *THERM(0)*/*THERM(1)*: 1 = alarm.	0
	x…x	Alarm limit	-
3504	FAULT LIMIT	Defines the fault trip limit for motor temperature measurement. The drive trips on fault *MOT OVERTEMP* (*0009*) when the limit is exceeded. When parameter *3501 SENSOR TYPE* value is set to *THERM(0)*/*THERM(1)*: 1 = fault.	0
	x…x	Fault limit	-
3505	AO EXCITATION	Enables current feed from analog output AO. Parameter setting overrides parameter group *15 ANALOG OUTPUTS* settings. With PTC the output current is 1.6 mA. With Pt 100 the output current is 9.1 mA.	*DISABLE*
	DISABLE	Disabled	0
	ENABLE	Enabled	1
36 TIMED FUNCTIONS		Time periods 1 to 4 and booster signal. See section *Timed functions* on page *163*.	
3601	TIMERS ENABLE	Selects the source for the timed function enable signal.	*NOT SEL*
	NOT SEL	Timed function is not selected.	0
	DI1	Digital input DI. Timed function enable on the rising edge of DI1.	1
	DI2	See selection *DI1*.	2
	DI3	See selection *DI1*.	3
	DI4	See selection *DI1*.	4
	DI5	See selection *DI1*.	5
	ACTIVE	Timed function is always enabled.	7
	DI1(INV)	Inverted digital input DI1. Timed function enable on the falling edge of DI1.	-1
	DI2(INV)	See selection *DI1(INV)*.	-2
	DI3(INV)	See selection *DI1(INV)*.	-3
	DI4(INV)	See selection *DI1(INV)*.	-4
	DI5(INV)	See selection *DI1(INV)*.	-5

All parameters			
No.	**Name/Value**	**Description**	**Def/FbEq**
3602	START TIME 1	Defines the daily start time 1. The time can be changed in 2-second steps.	00:00:00
	00:00:00… 23:59:58	hours:minutes:seconds. **Example:** If parameter value is set to 07:00:00, timed function 1 is activated at 7:00 (7 a.m).	
3603	STOP TIME 1	Defines the daily stop time 1. The time can be changed in 2-second steps.	00:00:00
	00:00:00… 23:59:58	hours:minutes:seconds. **Example:** If parameter value is set to 18:00:00, timed function 1 is deactivated at 18:00 (6 p.m).	
3604	START DAY 1	Defines the start day 1.	*MONDAY*
	MONDAY	**Example:** If parameter value is set to *MONDAY*, timed function 1 is active from Monday midnight (00:00:00).	1
	TUESDAY		2
	WEDNESDAY		3
	THURSDAY		4
	FRIDAY		5
	SATURDAY		6
	SUNDAY		7
3605	STOP DAY 1	Defines the stop day 1.	*MONDAY*
		See parameter *3604 START DAY 1*. **Example:** If parameter is set to *FRIDAY*, timed function 1 is deactivated on Friday midnight (23:59:58).	
3606	START TIME 2	See parameter *3602 START TIME 1*.	
		See parameter *3602 START TIME 1*.	
3607	STOP TIME 2	See parameter *3603 STOP TIME 1*.	
		See parameter *3603 STOP TIME 1*.	
3608	START DAY 2	See parameter *3604 START DAY 1*.	
		See parameter *3604 START DAY 1*.	
3609	STOP DAY 2	See parameter *3605 STOP DAY 1*.	
		See parameter *3605 STOP DAY 1*.	
3610	START TIME 3	See parameter *3602 START TIME 1*.	
		See parameter *3602 START TIME 1*.	
3611	STOP TIME 3	See parameter *3603 STOP TIME 1*.	
		See parameter *3603 STOP TIME 1*.	
3612	START DAY 3	See parameter *3604 START DAY 1*.	
		See parameter *3604 START DAY 1*.	
3613	STOP DAY 3	See parameter *3605 STOP DAY 1*.	
		See parameter *3605 STOP DAY 1*.	
3614	START TIME 4	See parameter *3602 START TIME 1*.	
		See parameter *3602 START TIME 1*.	
3615	STOP TIME 4	See parameter *3603 STOP TIME 1*.	

All parameters			
No.	**Name/Value**	**Description**	**Def/FbEq**
		See parameter *3603 STOP TIME 1*.	
3616	START DAY 4	See parameter *3604 START DAY 1*.	
		See parameter *3604 START DAY 1*.	
3617	STOP DAY 4	See parameter *3605 STOP DAY 1*.	
		See parameter *3605 STOP DAY 1*.	
3622	BOOSTER SEL	Selects the source for the booster activation signal.	*NOT SEL*
	NOT SEL	No booster activation signal	0
	DI1	Digital input DI1. 1 = active, 0 = inactive.	1
	DI2	See selection *DI1*.	2
	DI3	See selection *DI1*.	3
	DI4	See selection *DI1*.	4
	DI5	See selection *DI1*.	5
	DI1(INV)	Inverted digital input DI1. 0 = active, 1 = inactive.	-1
	DI2(INV)	See selection *DI1(INV)*.	-2
	DI3(INV)	See selection *DI1(INV)*.	-3
	DI4(INV)	See selection *DI1(INV)*.	-4
	DI5(INV)	See selection *DI1(INV)*.	-5
3623	BOOSTER TIME	Defines the time inside which the booster is deactivated after the booster activation signal is switched off.	00:00:00
	00:00:00… 23:59:58	hours:minutes:seconds **Example:** If parameter *3622 BOOSTER SEL* is set to *DI1* and *3623 BOOSTER TIME* is set to 01:30:00, the booster is active for 1 hour and 30 minutes after digital input DI is deactivated. 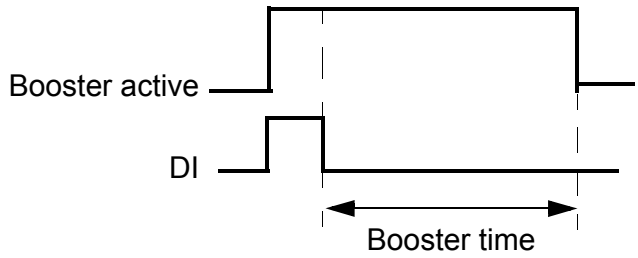	
3626	TIMED FUNC 1 SRC	Selects the time periods for *TIMED FUNC 1 SRC*. Timed function can consist of 0…4 time periods and a booster.	*NOT SEL*
	NOT SEL	No time periods selected	0
	T1	Time period 1	1
	T2	Time period 2	2
	T1+T2	Time periods 1 and 2	3
	T3	Time period 3	4
	T1+T3	Time periods 1 and 3	5
	T2+T3	Time periods 2 and 3	6
	T1+T2+T3	Time periods 1, 2 and 3	7

All parameters			
No.	**Name/Value**	**Description**	**Def/FbEq**
	T4	Time period 4	8
	T1+T4	Time periods 1 and 4	9
	T2+T4	Time periods 2 and 4	10
	T1+T2+T4	Time periods 1, 2 and 4	11
	T3+T4	Time periods 4 and 3	12
	T1+T3+T4	Time periods 1, 3 and 4	13
	T2+T3+T4	Time periods 2, 3 and 4	14
	T1+T2+T3+T4	Time periods 1, 2, 3 and 4	15
	BOOSTER	Booster	16
	T1+B	Booster and time period 1	17
	T2+B	Booster and time period 2	18
	T1+T2+B	Booster and time periods 1 and 2	19
	T3+B	Booster and time period 3	20
	T1+T3+B	Booster and time periods 1 and 3	21
	T2+T3+B	Booster and time periods 2 and 3	22
	T1+T2+T3+B	Booster and time periods 1, 2 and 3	23
	T4+B	Booster and time period 4	24
	T1+T4+B	Booster and time periods 1 and 4	25
	T2+T4+B	Booster and time periods 2 and 4	26
	T1+T2+T4+B	Booster and time periods 1, 2 and 4	27
	T3+T4+B	Booster and time periods 3 and 4	28
	T1+T3+T4+B	Booster and time periods 1, 3 and 4	29
	T2+T3+T4+B	Booster and time periods 2, 3 and 4	30
	T1+2+3+4+B	Booster and time periods 1, 2, 3 and 4	31
3627	TIMED FUNC 2 SRC	See parameter *3626 TIMED FUNC 1 SRC*.	
		See parameter *3626 TIMED FUNC 1 SRC*.	
3628	TIMED FUNC 3 SRC	See parameter *3626 TIMED FUNC 1 SRC*.	
		See parameter *3626 TIMED FUNC 1 SRC*.	
3629	TIMED FUNC 4 SRC	See parameter *3626 TIMED FUNC 1 SRC*.	
		See parameter *3626 TIMED FUNC 1 SRC*.	
40 PROCESS PID SET 1		Process PID (PID1) control parameter set 1. See section *PID control* on page *149*.	
4001	GAIN	Defines the gain for the process PID controller. High gain may cause speed oscillation.	1.0
	0.1…100.0	Gain. When value is set to 0.1, the PID controller output changes one-tenth as much as the error value. When value is set to 100, the PID controller output changes one hundred times as much as the error value.	1 = 0.1

All parameters			
No.	**Name/Value**	**Description**	**Def/FbEq**
4002	INTEGRATION TIME	Defines the integration time for the process PID1 controller. The integration time defines the rate at which the controller output changes when the error value is constant. The shorter the integration time, the faster the continuous error value is corrected. Too short an integration time makes the control unstable. A = Error B = Error value step C = Controller output with gain = 1 D = Controller output with gain = 10 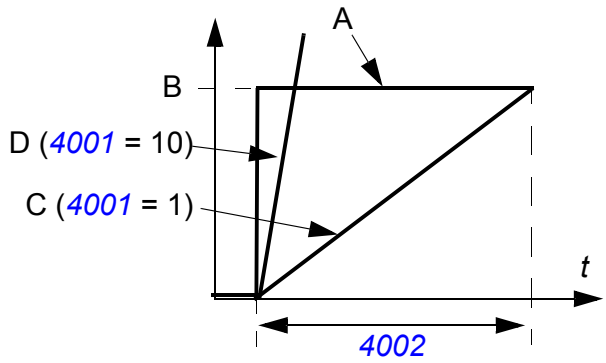	60.0 s
	0.0 = NOT SEL 0.1…3600.0 s	Integration time. If parameter value is set to zero, integration (I-part of the PID controller) is disabled.	1 = 0.1 s

All parameters			
No.	**Name/Value**	**Description**	**Def/FbEq**
4003	DERIVATION TIME	Defines the derivation time for the process PID controller. Derivative action boosts the controller output if the error value changes. The longer the derivation time, the more the speed controller output is boosted during the change. If the derivation time is set to zero, the controller works as a PI controller, otherwise as a PID controller. The derivation makes the control more responsive for disturbances. The derivative is filtered with a 1-pole filter. Filter time constant is defined by parameter *4004 PID DERIV FILTER*. 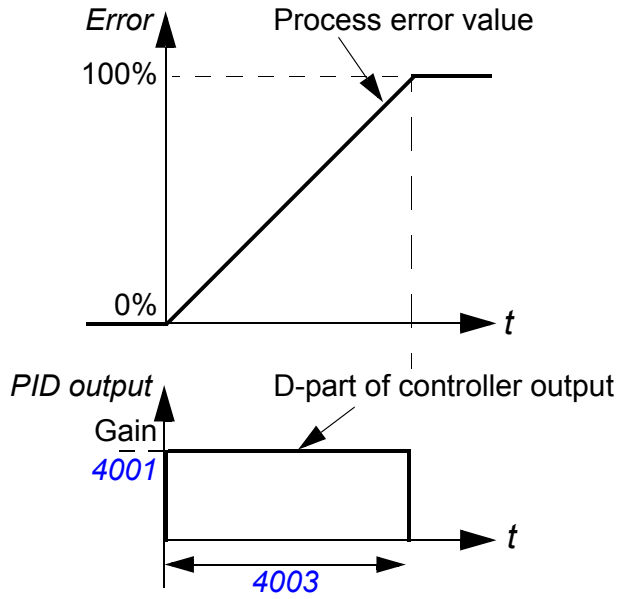	0.0 s
	0.0…10.0 s	Derivation time. If parameter value is set to zero, the derivative part of the PID controller is disabled.	1 = 0.1 s
4004	PID DERIV FILTER	Defines the filter time constant for the derivative part of the process PID controller. Increasing the filter time smooths the derivative and reduces noise.	1.0 s
	0.0…10.0 s	Filter time constant. If parameter value is set to zero, the derivative filter is disabled.	1 = 0.1 s
4005	ERROR VALUE INV	Selects the relationship between the feedback signal and drive speed.	*NO*
	NO	Normal: A decrease in feedback signal increases drive speed. Error = Reference - Feedback	0
	YES	Inverted: A decrease in feedback signal decreases drive speed. Error = Feedback - Reference	1
4006	UNITS	Selects the unit for PID controller actual values.	%
	0…68	See parameter *3405 OUTPUT1 UNIT* selections in the given range.	
4007	UNIT SCALE	Defines the decimal point location for PID controller actual values.	1

<table>
<tr><th colspan="4">All parameters</th></tr>
<tr><th>No.</th><th>Name/Value</th><th>Description</th><th>Def/FbEq</th></tr>
<tr><td></td><td>0…4</td><td>Example: PI (3.141593)
<table><tr><th>4007 value</th><th>Entry</th><th>Display</th></tr><tr><td>0</td><td>00003</td><td>3</td></tr><tr><td>1</td><td>00031</td><td>3.1</td></tr><tr><td>2</td><td>00314</td><td>3.14</td></tr><tr><td>3</td><td>03142</td><td>3.142</td></tr><tr><td>4</td><td>31416</td><td>3.1416</td></tr></table></td><td>1 = 1</td></tr>
<tr><td>4008</td><td>0% VALUE</td><td>Defines together with parameter 4009 100% VALUE the scaling applied to the PID controller’s actual values.
 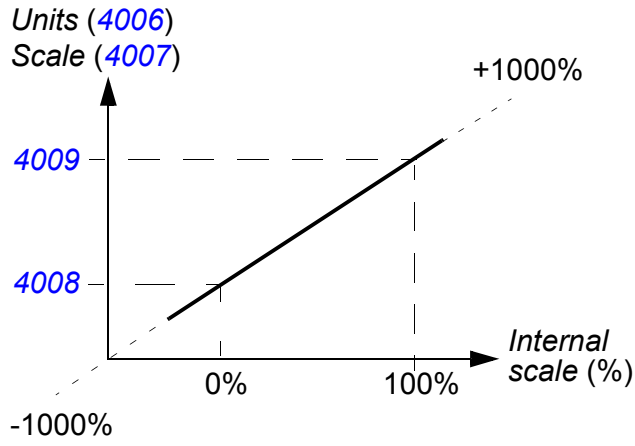
</td><td>0.0</td></tr>
<tr><td></td><td>x…x</td><td>Unit and range depend on the unit and scale defined by parameters 4006 UNITS and 4007 UNIT SCALE.</td><td></td></tr>
<tr><td>4009</td><td>100% VALUE</td><td>Defines together with parameter 4008 0% VALUE the scaling applied to the PID controller’s actual values.</td><td>100.0</td></tr>
<tr><td></td><td>x…x</td><td>Unit and range depend on the unit and scale defined by parameters 4006 UNITS and 4007 UNIT SCALE.</td><td></td></tr>
<tr><td>4010</td><td>SET POINT SEL</td><td>Selects the source for the process PID controller reference signal.</td><td>AI1</td></tr>
<tr><td></td><td>KEYPAD</td><td>Control panel</td><td>0</td></tr>
<tr><td></td><td>AI1</td><td>Analog input AI1</td><td>1</td></tr>
<tr><td></td><td>AI2</td><td>Analog input AI2</td><td>2</td></tr>
<tr><td></td><td>COMM</td><td>Fieldbus reference REF2</td><td>8</td></tr>
<tr><td></td><td>COMM+AI1</td><td>Summation of fieldbus reference REF2 and analog input AI1. See section Reference selection and correction on page 308.</td><td>9</td></tr>
<tr><td></td><td>COMM*AI1</td><td>Multiplication of fieldbus reference REF2 and analog input AI1. See section Reference selection and correction on page 308.</td><td>10</td></tr>
<tr><td></td><td>DI3U,4D(RNC)</td><td>Digital input DI3: Reference increase. Digital input DI4: Reference decrease. Stop command resets the reference to zero. The reference is not saved if the control source is changed from EXT1 to EXT2, from EXT2 to EXT1 or from LOC to REM.</td><td>11</td></tr>
</table>

All parameters			
No.	**Name/Value**	**Description**	**Def/FbEq**
	DI3U,4D(NC)	Digital input DI3: Reference increase. Digital input DI4: Reference decrease. The program stores the active reference (not reset by a stop command). The reference is not saved if the control source is changed from EXT1 to EXT2, from EXT2 to EXT1 or from LOC to REM.	12
	AI1+AI2	Reference is calculated with the following equation: REF = AI1(%) + AI2(%) - 50%	14
	AI1*AI2	Reference is calculated with the following equation: REF = AI1(%) · (AI2(%) / 50%)	15
	AI1-AI2	Reference is calculated with the following equation: REF = AI1(%) + 50% - AI2(%)	16
	AI1/AI2	Reference is calculated with the following equation: REF = AI1(%) · (50% / AI2 (%))	17
	INTERNAL	A constant value defined by parameter *4011 INTERNAL SETPNT*.	19
	DI4U,5D(NC)	See selection *DI3U,4D(NC)*.	31
	FREQ INPUT	Frequency input	32
	SEQ PROG OUT	Sequence programming output. See parameter group *84 SEQUENCE PROG*.	33
4011	INTERNAL SETPNT	Selects a constant value as process PID controller reference, when parameter *4010 SET POINT SEL* value is set to *INTERNAL*.	40
	x…x	Unit and range depend on the unit and scale defined by parameters *4006 UNITS* and *4007 UNIT SCALE*.	
4012	SETPOINT MIN	Defines the minimum value for the selected PID reference signal source. See parameter *4010 SET POINT SEL*.	0.0%
	-500.0…500.0%	Value in percent. **Example:** Analog input AI1 is selected as the PID reference source (value of parameter *4010* is *AI1*). The reference minimum and maximum correspond to the *1301 MINIMUM AI1* and *1302 MAXIMUM AI1* settings as follows: 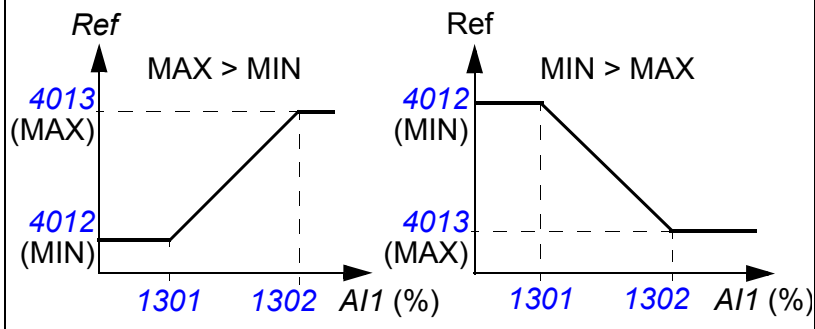	1 = 0.1%
4013	SETPOINT MAX	Defines the maximum value for the selected PID reference signal source. See parameters *4010 SET POINT SEL* and *4012 SETPOINT MIN*.	100.0%
	-500.0…500.0%	Value in percent	1 = 0.1%

All parameters			
No.	**Name/Value**	**Description**	**Def/FbEq**
4014	FBK SEL	Selects the process actual value (feedback signal) for the process PID controller: The sources for the variables ACT1 and ACT2 are further defined by parameters *4016 ACT1 INPUT* and *4017 ACT2 INPUT*.	*ACT1*
	ACT1	ACT1	1
	ACT1-ACT2	Subtraction of ACT1 and ACT2	2
	ACT1+ACT2	Addition of ACT1 and ACT2	3
	ACT1*ACT2	Multiplication of ACT1 and ACT2	4
	ACT1/ACT2	Division of ACT1 and ACT2	5
	MIN(ACT1,2)	Selects the smaller of ACT1 and ACT2	6
	MAX(ACT1,2)	Selects the higher of ACT1 and ACT2	7
	sqrt(ACT1-2)	Square root of the subtraction of ACT1 and ACT2	8
	sqA1+sqA2	Addition of the square root of ACT1 and the square root of ACT2	9
	sqrt(ACT1)	Square root of ACT1	10
	COMM FBK 1	Signal *0158 PID COMM VALUE 1* value	11
	COMM FBK 2	Signal *0159 PID COMM VALUE 2* value	12
4015	FBK MULTIPLIER	Defines an extra multiplier for the value defined by parameter *4014 FBK SEL*. Parameter is used mainly in applications where feedback value is calculated from another variable (eg flow from pressure difference).	0.000
	-32.768… 32.767	Multiplier. If parameter value is set to zero, no multiplier is used.	1 = 0.001
4016	ACT1 INPUT	Defines the source for actual value 1 (ACT1). See also parameter *4018 ACT1 MINIMUM*.	*AI2*
	AI1	Uses analog input 1 for ACT1	1
	AI2	Uses analog input 2 for ACT1	2
	CURRENT	Uses current for ACT1	3
	TORQUE	Uses torque for ACT1	4
	POWER	Uses power for ACT1	5
	COMM ACT 1	Uses value of signal *0158 PID COMM VALUE 1* for ACT1	6
	COMM ACT 2	Uses value of signal *0159 PID COMM VALUE 2* for ACT1	7
	FREQ INPUT	Frequency input	8
4017	ACT2 INPUT	Defines the source for actual value ACT2. See also parameter *4020 ACT2 MINIMUM*.	*AI2*
		See parameter *4016 ACT1 INPUT*.	

<table>
<tr><th colspan="4">All parameters</th></tr>
<tr><th>No.</th><th>Name/Value</th><th>Description</th><th>Def/FbEq</th></tr>
<tr><td>4018</td><td>ACT1 MINIMUM</td><td>Sets the minimum value for ACT1.
Scales the source signal used as the actual value ACT1 (defined by parameter 4016 ACT1 INPUT). For parameter 4016 values 6 (COMM ACT 1) and 7 (COMM ACT 2) scaling is not done.
<table>
<tr><th>Par 4016</th><th>Source</th><th>Source min.</th><th>Source max.</th></tr>
<tr><td>1</td><td>Analog input 1</td><td>1301 MINIMUM AI1</td><td>1302 MAXIMUM AI1</td></tr>
<tr><td>2</td><td>Analog input 2</td><td>1304 MINIMUM AI2</td><td>1305 MAXIMUM AI2</td></tr>
<tr><td>3</td><td>Current</td><td>0</td><td>2 · nominal current</td></tr>
<tr><td>4</td><td>Torque</td><td>-2 · nominal torque</td><td>2 · nominal torque</td></tr>
<tr><td>5</td><td>Power</td><td>-2 · nominal power</td><td>2 · nominal power</td></tr>
</table>
A = Normal; B = Inversion (ACT1 minimum > ACT1 maximum)
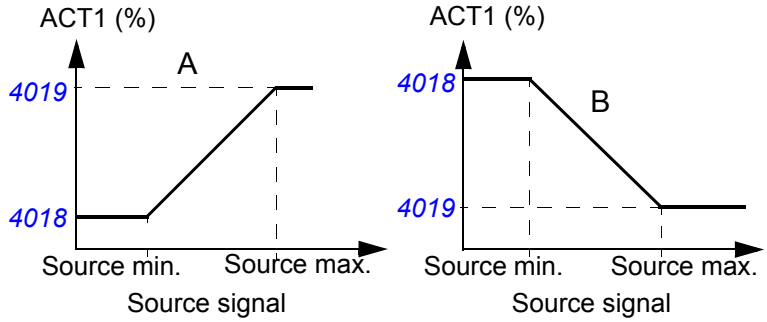
</td><td>0%</td></tr>
<tr><td></td><td>-1000…1000%</td><td>Value in percent</td><td>1 = 1%</td></tr>
<tr><td>4019</td><td>ACT1 MAXIMUM</td><td>Defines the maximum value for variable ACT1 if an analog input is selected as a source for ACT1. See parameter 4016 ACT1 INPUT. The minimum (4018 ACT1 MINIMUM) and maximum settings of ACT1 define how the voltage/current signal received from the measuring device is converted to a percentage value used by the process PID controller.
See parameter 4018 ACT1 MINIMUM.</td><td>100%</td></tr>
<tr><td></td><td>-1000…1000%</td><td>Value in percent</td><td>1 = 1%</td></tr>
<tr><td>4020</td><td>ACT2 MINIMUM</td><td>See parameter 4018 ACT1 MINIMUM.</td><td>0%</td></tr>
<tr><td></td><td>-1000…1000%</td><td>See parameter 4018.</td><td>1 = 1%</td></tr>
<tr><td>4021</td><td>ACT2 MAXIMUM</td><td>See parameter 4019 ACT1 MAXIMUM.</td><td>100%</td></tr>
<tr><td></td><td>-1000…1000%</td><td>See parameter 4019.</td><td>1 = 1%</td></tr>
<tr><td>4022</td><td>SLEEP SELECTION</td><td>Activates the sleep function and selects the source for the activation input. See section Sleep function for the process PID (PID1) control on page 153.</td><td>NOT SEL</td></tr>
<tr><td></td><td>NOT SEL</td><td>No sleep function selected</td><td>0</td></tr>
</table>

All parameters			
No.	**Name/Value**	**Description**	**Def/FbEq**
	DI1	The function is activated/deactivated through digital input DI1.1 = activation, 0 = deactivation. The internal sleep criteria set by parameters *4023 PID SLEEP LEVEL* and *4025 WAKE-UP DEV* are not effective. The sleep start and stop delay parameters *4024 PID SLEEP DELAY* and *4026 WAKE-UP DELAY* are effective.	1
	DI2	See selection *DI1*.	2
	DI3	See selection *DI1*.	3
	DI4	See selection *DI1*.	4
	DI5	See selection *DI1*.	5
	INTERNAL	Activated and deactivated automatically as defined by parameters *4023 PID SLEEP LEVEL* and *4025 WAKE-UP DEV*.	7
	DI1(INV)	The function is activated/deactivated through inverted digital input DI1. 1 = deactivation, 0 = activation. The internal sleep criteria set by parameters *4023 PID SLEEP LEVEL* and *4025 WAKE-UP DEV* are not effective. The sleep start and stop delay parameters *4024 PID SLEEP DELAY* and *4026 WAKE-UP DELAY* are effective.	-1
	DI2(INV)	See selection *DI1(INV)*.	-2
	DI3(INV)	See selection *DI1(INV)*.	-3
	DI4(INV)	See selection *DI1(INV)*.	-4
	DI5(INV)	See selection *DI1(INV)*.	-5

All parameters			
No.	**Name/Value**	**Description**	**Def/FbEq**
4023	PID SLEEP LEVEL	Defines the start limit for the sleep function. If the motor speed is below a set level (*4023*) longer than the sleep delay (*4024*), the drive shifts to the sleeping mode: The motor is stopped and the control panel shows alarm message *PID SLEEP* (*2018*). Parameter *4022 SLEEP SELECTION* must be set to *INTERNAL*. 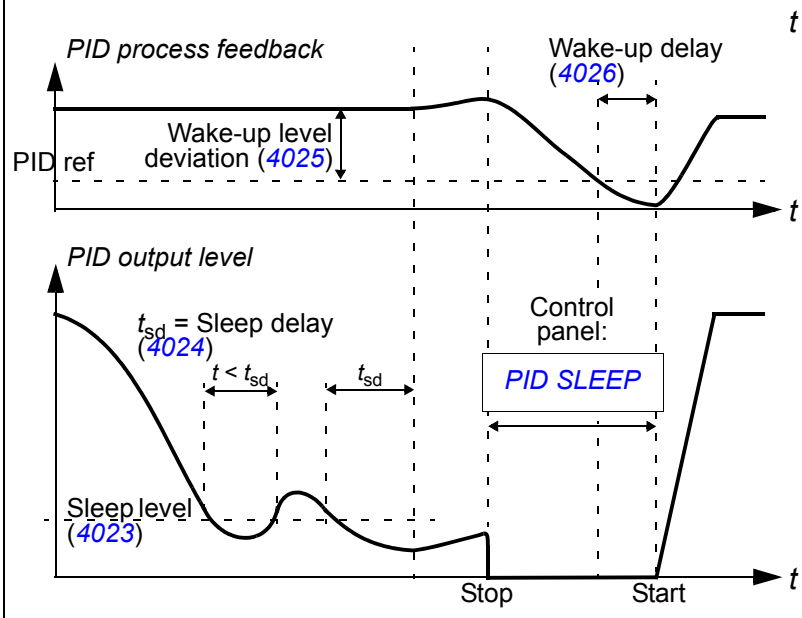	0.0 Hz / 0 rpm
	0.0…500.0 Hz / 0…30000 rpm	Sleep start level	1 = 0.1 Hz 1 rpm
4024	PID SLEEP DELAY	Defines the delay for the sleep start function. See parameter *4023 PID SLEEP LEVEL*. When the motor speed falls below the sleep level, the counter starts. When the motor speed exceeds the sleep level, the counter is reset.	60.0 s
	0.0…3600.0 s	Sleep start delay	1 = 0.1 s

All parameters			
No.	**Name/Value**	**Description**	**Def/FbEq**
4025	WAKE-UP DEV	Defines the wake-up deviation for the sleep function. The drive wakes up if the process actual value deviation from the PID reference value exceeds the set wake-up deviation (*4025*) longer than the wake-up delay (*4026*). Wake-up level depends on parameter *4005 ERROR VALUE INV* settings. If parameter *4005* is set to 0: Wake-up level = PID reference (*4010*) - Wake-up deviation (*4025*). If parameter *4005* is set to 1: Wake-up level = PID reference (*4010*) + Wake-up deviation (*4025*) 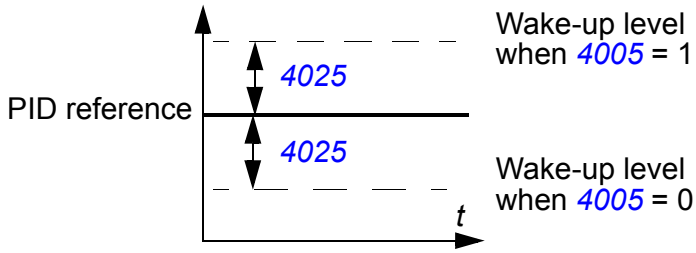 See also figures for parameter *4023 PID SLEEP LEVEL*.	0
	x…x	Unit and range depend on the unit and scale defined by parameters *4026 WAKE-UP DELAY* and *4007 UNIT SCALE*.	
4026	WAKE-UP DELAY	Defines the wake-up delay for the sleep function. See parameter *4023 PID SLEEP LEVEL*.	0.50 s
	0.00…60.00 s	Wake-up delay	1 = 0.01 s
4027	PID 1 PARAM SET	Defines the source from which the drive reads the signal that selects between PID parameter set 1 and 2. PID parameter set 1 is defined by parameters *4001*…*4026*. PID parameter set 2 is defined by parameters *4101*…*4126*.	*SET 1*
	SET 1	PID SET 1 is active.	0
	DI1	Digital input DI1. 1 = PID SET 2, 0 = PID SET 1.	1
	DI2	See selection *DI1*.	2
	DI3	See selection *DI1*.	3
	DI4	See selection *DI1*.	4
	DI5	See selection *DI1*.	5
	SET 2	PID SET 2 is active.	7
	TIMED FUNC 1	Timed PID SET 1/2 control. Timed function 1 inactive = PID SET 1, timed function 1 active = PID SET 2. See parameter group *36 TIMED FUNCTIONS*.	8
	TIMED FUNC 2	See selection *TIMED FUNC 1*.	9
	TIMED FUNC 3	See selection *TIMED FUNC 1*.	10
	TIMED FUNC 4	See selection *TIMED FUNC 1*.	11
	DI1(INV)	Inverted digital input DI1. 0 = PID SET 2, 1 = PID SET 1.	-1

All parameters			
No.	**Name/Value**	**Description**	**Def/FbEq**
	DI2(INV)	See selection *DI1(INV)*.	-2
	DI3(INV)	See selection *DI1(INV)*.	-3
	DI4(INV)	See selection *DI1(INV)*.	-4
	DI5(INV)	See selection *DI1(INV)*.	-5
41 PROCESS PID SET 2		Process PID (PID1) control parameter set 2. See section *PID control* on page *149*.	
4101	GAIN	See parameter *4001 GAIN*.	
4102	INTEGRATION TIME	See parameter *4002 INTEGRATION TIME*.	
4103	DERIVATION TIME	See parameter *4003 DERIVATION TIME*.	
4104	PID DERIV FILTER	See parameter *4004 PID DERIV FILTER*.	
4105	ERROR VALUE INV	See parameter *4005 ERROR VALUE INV*.	
4106	UNITS	See parameter *4006 UNITS*.	
4107	UNIT SCALE	See parameter *4007 UNIT SCALE*.	
4108	0% VALUE	See parameter *4008 0% VALUE*.	
4109	100% VALUE	See parameter *4009 100% VALUE*.	
4110	SET POINT SEL	See parameter *4010 SET POINT SEL*.	
4111	INTERNAL SETPNT	See parameter *4011 INTERNAL SETPNT*.	
4112	SETPOINT MIN	See parameter *4012 SETPOINT MIN*.	
4113	SETPOINT MAX	See parameter *4013 SETPOINT MAX*.	
4114	FBK SEL	See parameter *4014 FBK SEL*.	
4115	FBK MULTIPLIER	See parameter *4015 FBK MULTIPLIER*.	
4116	ACT1 INPUT	See parameter *4016 ACT1 INPUT*.	
4117	ACT2 INPUT	See parameter *4017 ACT2 INPUT*.	
4118	ACT1 MINIMUM	See parameter *4018 ACT1 MINIMUM*.	
4119	ACT1 MAXIMUM	See parameter *4019 ACT1 MAXIMUM*.	
4120	ACT2 MINIMUM	See parameter *4020 ACT2 MINIMUM*.	
4121	ACT2 MAXIMUM	See parameter *4021 ACT2 MAXIMUM*.	
4122	SLEEP SELECTION	See parameter *4022 SLEEP SELECTION*.	
4123	PID SLEEP LEVEL	See parameter *4023 PID SLEEP LEVEL*.	
4124	PID SLEEP DELAY	See parameter *4024 PID SLEEP DELAY*.	

All parameters			
No.	**Name/Value**	**Description**	**Def/FbEq**
4125	WAKE-UP DEV	See parameter *4025 WAKE-UP DEV*.	
4126	WAKE-UP DELAY	See parameter *4026 WAKE-UP DELAY*.	
42 EXT / TRIM PID		External/Trim PID (PID2) control. See section *PID control* on page *149*.	
4201	GAIN	See parameter *4001 GAIN*.	
4202	INTEGRATION TIME	See parameter *4002 INTEGRATION TIME*.	
4203	DERIVATION TIME	See parameter *4003 DERIVATION TIME*.	
4204	PID DERIV FILTER	See parameter *4004 PID DERIV FILTER*.	
4205	ERROR VALUE INV	See parameter *4005 ERROR VALUE INV*.	
4206	UNITS	See parameter *4006 UNITS*.	
4207	UNIT SCALE	See parameter *4007 UNIT SCALE*.	
4208	0% VALUE	See parameter *4008 0% VALUE*.	
4209	100% VALUE	See parameter *4009 100% VALUE*.	
4210	SET POINT SEL	See parameter *4010 SET POINT SEL*.	
4211	INTERNAL SETPNT	See parameter *4011 INTERNAL SETPNT*.	
4212	SETPOINT MIN	See parameter *4012 SETPOINT MIN*.	
4213	SETPOINT MAX	See parameter *4013 SETPOINT MAX*.	
4214	FBK SEL	See parameter *4014 FBK SEL*.	
4215	FBK MULTIPLIER	See parameter *4015 FBK MULTIPLIER*.	
4216	ACT1 INPUT	See parameter *4016 ACT1 INPUT*.	
4217	ACT2 INPUT	See parameter *4017 ACT2 INPUT*.	
4218	ACT1 MINIMUM	See parameter *4018 ACT1 MINIMUM*.	
4219	ACT1 MAXIMUM	See parameter *4019 ACT1 MAXIMUM*.	
4220	ACT2 MINIMUM	See parameter *4020 ACT2 MINIMUM*.	
4221	ACT2 MAXIMUM	See parameter *4021 ACT2 MAXIMUM*.	
4228	ACTIVATE	Selects the source for the external PID function activation signal. Parameter *4230 TRIM MODE* must be set to *NOT SEL*.	*NOT SEL*
	NOT SEL	No external PID control activation selected	0
	DI1	Digital input DI1. 1 = active, 0 = inactive.	1
	DI2	See selection *DI1*.	2

All parameters			
No.	**Name/Value**	**Description**	**Def/FbEq**
	DI3	See selection *DI1*.	3
	DI4	See selection *DI1*.	4
	DI5	See selection *DI1*.	5
	DRIVE RUN	Activation at drive start. Start (drive running) = active.	7
	ON	Activation at drive power-up. Power-up (drive powered) = active.	8
	TIMED FUNC 1	Activation by a timed function. Timed function 1 active = PID control active. See parameter group *36 TIMED FUNCTIONS*.	9
	TIMED FUNC 2	See selection *TIMED FUNC 1*.	10
	TIMED FUNC 3	See selection *TIMED FUNC 1*.	11
	TIMED FUNC 4	See selection *TIMED FUNC 1*.	12
	DI1(INV)	Inverted digital input DI1. 0 = active, 1 = inactive.	-1
	DI2(INV)	See selection *DI1(INV)*.	-2
	DI3(INV)	See selection *DI1(INV)*.	-3
	DI4(INV)	See selection *DI1(INV)*.	-4
	DI5(INV)	See selection *DI1(INV)*.	-5
4229	OFFSET	Defines the offset for the external PID controller output. When PID controller is activated, controller output starts from the offset value. When PID controller is deactivated, controller output is reset to the offset value. Parameter *4230 TRIM MODE* must be set to *NOT SEL*.	0.0%
	0.0…100.0%	Value in percent	1 = 0.1%
4230	TRIM MODE	Activates the trim function and selects between the direct and proportional trimming. With trimming it is possible to combine a corrective factor to the drive reference. See section *Reference trimming* on page *129*.	*NOT SEL*
	NOT SEL	No trim function selected	0
	PROPORTIONAL	Active. The trimming factor is proportional to the rpm/Hz reference before trimming (REF1).	1
	DIRECT	Active. The trimming factor is relative to a fixed maximum limit used in the reference control loop (maximum speed, frequency or torque).	2
4231	TRIM SCALE	Defines the multiplier for the trimming function. See section *Reference trimming* on page *129*.	0.0%
	-100.0…100.0%	Multiplier	1 = 0.1%
4232	CORRECTION SRC	Selects the trim reference. See section *Reference trimming* on page *129*.	*PID2REF*
	PID2REF	PID2 reference selected by parameter *4210* (ie signal *0129 PID 2 SETPNT* value)	1
	PID2OUTPUT	PID2 output, ie signal *0127 PID 2 OUTPUT* value	2

All parameters			
No.	**Name/Value**	**Description**	**Def/FbEq**
4233	TRIM SELECTION	Selects whether the trimming is used for correcting the speed or torque reference. See section *Reference trimming* on page *129*.	*SPEED/FREQ*
	SPEED/FREQ	Speed reference trimming	0
	TORQUE	Torque reference trimming (only for REF2 (%))	1
43 MECH BRK CONTROL		Control of a mechanical brake. See section *Control of a mechanical brake* on page *157*.	
4301	BRAKE OPEN DLY	Defines the brake open delay (= the delay between the internal open brake command and the release of the motor speed control). The delay counter starts when the motor current/torque/speed has risen to the level required at brake release (parameter *4302 BRAKE OPEN LVL* or *4304 FORCED OPEN LVL*) and the motor has been magnetized. Simultaneously with the start of the counter, the brake function energizes the relay output controlling the brake and the brake starts opening.	0.20 s
	0.00…2.50 s	Delay time	1 = 0.01 s
4302	BRAKE OPEN LVL	Defines the motor starting torque/current at brake release. After start the drive current/torque is frozen to the set value, until the motor is magnetized.	100%
	0.0…180.0%	Value in percent of the nominal torque T_N (in vector control) or the nominal current I_{2N} (in scalar control). The control mode is selected by parameter *9904 MOTOR CTRL MODE*.	1 = 0.1%
4303	BRAKE CLOSE LVL	Defines the brake close speed. After stop the brake is closed when drive speed falls below the set value.	4.0%
	0.0…100.0%	Value in percent of the nominal speed (in vector control) or the nominal frequency (in scalar control). The control mode is selected by parameter *9904 MOTOR CTRL MODE*.	1 = 0.1%
4304	FORCED OPEN LVL	Defines the speed at brake release. Parameter setting overrides parameter *4302 BRAKE OPEN LVL* setting. After start, the drive speed is frozen to the set value, until the motor is magnetized. The purpose of this parameter is to generate enough start torque to prevent the motor rotating into the wrong direction because of the motor load.	*0.0 = NOT SEL*
	0.0 = NOT SEL 0.0…100.0%	Value in percent of the maximum frequency (in scalar control) or the maximum speed (in vector control). If parameter value is set to zero, the function is disabled. The control mode is selected by parameter *9904 MOTOR CTRL MODE*.	1 = 0.1%
4305	BRAKE MAGN DELAY	Defines motor magnetizing time. After start drive current/torque/speed is frozen to the value defined by parameter *4302 BRAKE OPEN LVL* or *4304 FORCED OPEN LVL* for the set time.	*0 = NOT SEL*

All parameters			
No.	**Name/Value**	**Description**	**Def/FbEq**
	0 = NOT SEL 0…10000 ms	magnetizing time. If parameter value is set to zero, the function is disabled.	1 = 1 ms
4306	RUNTIME FREQ LVL	Defines the brake close speed. When frequency falls below the set level during run, the brake is closed. The brake is re-opened when the requirements set by parameters *4301*…*4305* are met.	*0.0 = NOT SEL*
	0.0 = NOT SEL 0.0…100.0%	Value in percent of the maximum frequency (in scalar control) or the maximum speed (in vector control). If parameter value is set to zero, the function is disabled. The control mode is selected by parameter *9904 MOTOR CTRL MODE*.	1 = 0.1%
4307	BRK OPEN LVL SEL	Selects the torque (in vector control) or current (in scalar control) applied at brake release.	*PAR 4302*
	PAR 4302	Value of parameter *4302 BRAKE OPEN LVL* used.	1
	MEMORY	Torque value (in vector control) or current value (in scalar control) saved in parameter *0179 BRAKE TORQUE MEM* used. Useful in applications where initial torque is needed to prevent unintended movement when the mechanical brake is released.	2
50 ENCODER		Encoder connection. For more information, see *MTAC-01 pulse encoder interface module user's manual* (3AFE68591091 [English]).	
5001	PULSE NR	States the number of encoder pulses per one revolution.	1024 ppr
	32…16384 ppr	Pulse number in pulses per round (ppr)	1 = 1 ppr
5002	ENCODER ENABLE	Enables the encoder.	*DISABLE*
	DISABLE	Disabled	0
	ENABLE	Enabled	1
5003	ENCODER FAULT	Defines the operation of the drive if a failure is detected in communication between the pulse encoder and the pulse encoder interface module, or between the module and the drive.	*FAULT*
	FAULT	The drive trips on fault *ENCODER ERR* (*0023*).	1
	ALARM	The drive generates alarm *ENCODER ERROR* (*2024*).	2
5010	Z PLS ENABLE	Enables the encoder zero (Z) pulse. Zero pulse is used for position reset.	*DISABLE*
	DISABLE	Disabled	0
	ENABLE	Enabled	1
5011	POSITION RESET	Enables the position reset.	*DISABLE*
	DISABLE	Disabled	0
	ENABLE	Enabled	1

All parameters			
No.	**Name/Value**	**Description**	**Def/FbEq**
51 EXT COMM MODULE		The parameters need to be adjusted only when a fieldbus adapter module (optional) is installed and activated by parameter *9802 COMM PROT SEL*. For more details on the parameters, refer to the manual of the fieldbus module and chapter *Fieldbus control with fieldbus adapter* on page *325*. These parameter settings will remain the same even though the macro is changed. **Note:** In adapter module the parameter group number is 1.	
5101	FBA TYPE	Displays the type of the connected fieldbus adapter module.	
	NOT DEFINED	Fieldbus module is not found, or it is not properly connected, or parameter *9802 COMM PROT SEL* setting is not *EXT FBA*.	0
	PROFIBUS-DP	Profibus adapter module	1
	CANopen	CANopen adapter module	32
	DEVICENET	DeviceNet adapter module	37
5102	FB PAR 2	These parameters are adapter module-specific. For more information, see the module manual. Note that not all of these parameters are necessarily visible.	
…	…		
5126	FB PAR 26		
5127	FBA PAR REFRESH	Validates any changed adapter module configuration parameter settings. After refreshing, the value reverts automatically to *DONE*.	
	DONE	Refreshing done	0
	REFRESH	Refreshing	1
5128	FILE CPI FW REV	Displays the parameter table revision of the fieldbus adapter module mapping file stored in the memory of the drive. Format is xyz where: • x = major revision number • y = minor revision number • x = correction letter.	
	0000…FFFF hex	Parameter table revision	1 = 1
5129	FILE CONFIG ID	Displays the drive type code of the fieldbus adapter module mapping file stored in the memory of the drive.	
	0…65535	Drive type code of fieldbus adapter module mapping file	1 = 1
5130	FILE CONFIG REV	Displays the fieldbus adapter module mapping file revision stored in the memory of the drive in decimal format. **Example:** 1 = revision 1.	
	0…65535	Mapping file revision	1 = 1
5131	FBA STATUS	Displays the status of the fieldbus adapter module communication.	
	IDLE	Adapter is not configured.	0
	EXECUT INIT	Adapter is initializing.	1

All parameters			
No.	**Name/Value**	**Description**	**Def/FbEq**
	TIME OUT	A time-out has occurred in the communication between the adapter and the drive.	2
	CONFIG ERROR	Adapter configuration error: The major or minor revision code of the common program revision in the fieldbus adapter module is not the revision required by the module (see parameter *5132 FBA CPI FW REV*) or mapping file upload has failed more than three times.	3
	OFF-LINE	Adapter is off-line.	4
	ON-LINE	Adapter is on-line.	5
	RESET	Adapter is performing a hardware reset.	6
5132	FBA CPI FW REV	Displays the common program revision of the adapter module in format axyz, where: • a = major revision number • xy = minor revision numbers • z = correction letter. **Example:** 190A = revision 1.90A	
		Common program revision of the adapter module	1 = 1
5133	FBA APPL FW REV	Displays the application program revision of the adapter module in format axyz, where: • a = major revision number • xy = minor revision numbers • z = correction letter. **Example:** 190A = revision 1.90A	
		Application program revision of the adapter module	1 = 1
52 PANEL COMM		Communication settings for the control panel port on the drive	
5201	STATION ID	Defines the address of the drive. Two units with the same address are not allowed on-line.	1
	1…247	Address	1 = 1
5202	BAUD RATE	Defines the transfer rate of the link.	*9.6 kb/s*
	1.2 kb/s	1.2 kbit/s	1 = 0.1 kbit/s
	2.4 kb/s	2.4 kbit/s	
	4.8 kb/s	4.8 kbit/s	
	9.6 kb/s	9.6 kbit/s	
	19.2 kb/s	19.2 kbit/s	
	38.4 kb/s	38.4 kbit/s	
	57.6 kb/s	57.6 kbit/s	
	115.2 kb/s	115.2 kbit/s	
5203	PARITY	Defines the use of parity and stop bit(s). The same setting must be used in all on-line stations.	*8 NONE 1*
	8 NONE 1	8 data bits, no parity bit, one stop bit	0
	8 NONE 2	8 data bits, no parity bit, two stop bits	1

All parameters			
No.	**Name/Value**	**Description**	**Def/FbEq**
	8 EVEN 1	8 data bits, even parity indication bit, one stop bit	2
	8 ODD 1	8 data bits, odd parity indication bit, one stop bit	3
5204	OK MESSAGES	Number of valid messages received by the drive. During normal operation, this number increases constantly.	0
	0…65535	Number of messages	1 = 1
5205	PARITY ERRORS	Number of characters with a parity error received from the Modbus link. If the number is high, check that the parity settings of the devices connected on the bus are the same. **Note:** High electromagnetic noise levels generate errors.	0
	0…65535	Number of characters	1 = 1
5206	FRAME ERRORS	Number of characters with a framing error received by the Modbus link. If the number is high, check that the communication speed settings of the devices connected on the bus are the same. **Note:** High electromagnetic noise levels generate errors.	0
	0…65535	Number of characters	1 = 1
5207	BUFFER OVERRUNS	Number of characters which overflow the buffer, ie number of characters which exceed the maximum message length, 128 bytes.	0
	0…65535	Number of characters	1 = 1
5208	CRC ERRORS	Number of messages with an CRC (cyclic redundancy check) error received by the drive. If the number is high, check CRC calculation for possible errors. **Note:** High electromagnetic noise levels generate errors.	0
	0…65535	Number of messages	1 = 1
53 EFB PROTOCOL		Embedded fieldbus link settings. See chapter *Fieldbus control with embedded fieldbus* on page *301*.	
5302	EFB STATION ID	Defines the address of the device. Two units with the same address are not allowed on-line.	1
	0…247	Address	1 = 1
5303	EFB BAUD RATE	Defines the transfer rate of the link.	*9.6 kb/s*
	1.2 kb/s	1.2 kbit/s	1 = 0.1 kbit/s
	2.4 kb/s	2.4 kbit/s	
	4.8 kb/s	4.8 kbit/s	
	9.6 kb/s	9.6 kbit/s	
	19.2 kb/s	19.2 kbit/s	
	38.4 kb/s	38.4 kbit/s	
	57.6 kb/s	57.6 kbit/s	
	115.2 kb/s	115.2 kbit/s	
5304	EFB PARITY	Defines the use of parity and stop bit(s) and the data length. The same setting must be used in all on-line stations.	*8 NONE 1*
	8 NONE 1	No parity bit, one stop bit, 8 data bits	0

All parameters			
No.	**Name/Value**	**Description**	**Def/FbEq**
	8 NONE 2	No parity bit, two stop bits, 8 data bits	1
	8 EVEN 1	Even parity indication bit, one stop bit, 8 data bits	2
	8 ODD 1	Odd parity indication bit, one stop bit, 8 data bits	3
5305	EFB CTRL PROFILE	Selects the communication profile. See section *Communication profiles* on page *315*.	*ABB DRV LIM*
	ABB DRV LIM	ABB drives limited profile	0
	DCU PROFILE	DCU profile	1
	ABB DRV FULL	ABB drives profile	2
5306	EFB OK MESSAGES	Number of valid messages received by the drive. During normal operation, this number increases constantly.	0
	0…65535	Number of messages	1 = 1
5307	EFB CRC ERRORS	Number of messages with an CRC (cyclic redundancy check) error received by the drive. If the number is high, check CRC calculation for possible errors. **Note:** High electromagnetic noise levels generate errors.	0
	0…65535	Number of messages	1 = 1
5310	EFB PAR 10	Selects an actual value to be mapped to Modbus register 40005.	0
	0…65535	Parameter index	1 = 1
5311	EFB PAR 11	Selects an actual value to be mapped to Modbus register 40006.	0
	0…65535	Parameter index	1 = 1
5312	EFB PAR 12	Selects an actual value to be mapped to Modbus register 40007.	0
	0…65535	Parameter index	1 = 1
5313	EFB PAR 13	Selects an actual value to be mapped to Modbus register 40008.	0
	0…65535	Parameter index	1 = 1
5314	EFB PAR 14	Selects an actual value to be mapped to Modbus register 40009.	0
	0…65535	Parameter index	1 = 1
5315	EFB PAR 15	Selects an actual value to be mapped to Modbus register 40010.	0
	0…65535	Parameter index	1 = 1
5316	EFB PAR 16	Selects an actual value to be mapped to Modbus register 40011.	0
	0…65535	Parameter index	1 = 1
5317	EFB PAR 17	Selects an actual value to be mapped to Modbus register 40012.	0
	0…65535	Parameter index	1 = 1

<table>
<tr><th colspan="4">All parameters</th></tr>
<tr><th>No.</th><th>Name/Value</th><th>Description</th><th>Def/FbEq</th></tr>
<tr><td>5318</td><td>EFB PAR 18</td><td>For Modbus: Sets an additional delay before the drive begins transmitting response to the master request.</td><td>0</td></tr>
<tr><td></td><td>0…65535</td><td>Delay in milliseconds</td><td>1 = 1</td></tr>
<tr><td>5319</td><td>EFB PAR 19</td><td>ABB drives profile (ABB DRV LIM or ABB DRV FULL) Control word. Read only copy of the fieldbus Control word.</td><td>0000 hex</td></tr>
<tr><td></td><td>0000…FFFF hex</td><td>Control word</td><td></td></tr>
<tr><td>5320</td><td>EFB PAR 20</td><td>ABB drives profile (ABB DRV LIM or ABB DRV FULL) Status word. Read only copy of the fieldbus Status word.</td><td>0000 hex</td></tr>
<tr><td></td><td>0000…FFFF hex</td><td>Status word</td><td></td></tr>
<tr><td colspan="2">54 FBA DATA IN</td><td>Data from the drive to the fieldbus controller through a fieldbus adapter. See chapter Fieldbus control with fieldbus adapter on page 325.
Note: In adapter module the parameter group number is 3.</td><td></td></tr>
<tr><td>5401</td><td>FBA DATA IN 1</td><td>Selects data to be transferred from the drive to the fieldbus controller.</td><td></td></tr>
<tr><td></td><td>0</td><td>Not in use</td><td></td></tr>
<tr><td></td><td>1…6</td><td>Control and status data words
<table><tr><th>5401 setting</th><th>Data word</th></tr><tr><td>1</td><td>Control word</td></tr><tr><td>2</td><td>REF1</td></tr><tr><td>3</td><td>REF2</td></tr><tr><td>4</td><td>Status word</td></tr><tr><td>5</td><td>Actual value 1</td></tr><tr><td>6</td><td>Actual value 2</td></tr></table></td><td></td></tr>
<tr><td></td><td>101…9999</td><td>Parameter index</td><td></td></tr>
<tr><td>5402</td><td>FBA DATA IN 2</td><td>See 5401 FBA DATA IN 1.</td><td></td></tr>
<tr><td>…</td><td>…</td><td>…</td><td></td></tr>
<tr><td>5410</td><td>FBA DATA IN 10</td><td>See 5401 FBA DATA IN 1.</td><td></td></tr>
<tr><td colspan="2">55 FBA DATA OUT</td><td>Data from the fieldbus controller to the drive through a fieldbus adapter. See chapter Fieldbus control with fieldbus adapter on page 325.
Note: In adapter module the parameter group number is 2.</td><td></td></tr>
<tr><td>5501</td><td>FBA DATA OUT 1</td><td>Selects data to be transferred from the fieldbus controller to the drive.</td><td></td></tr>
<tr><td></td><td>0</td><td>Not in use</td><td></td></tr>
</table>

<table>
<tr><th colspan="4">All parameters</th></tr>
<tr><th>No.</th><th>Name/Value</th><th>Description</th><th>Def/FbEq</th></tr>
<tr><td></td><td>1…6</td><td>Control and status data words<table><tr><th>5501 setting</th><th>Data word</th></tr><tr><td>1</td><td>Control word</td></tr><tr><td>2</td><td>REF1</td></tr><tr><td>3</td><td>REF2</td></tr><tr><td>4</td><td>Status word</td></tr><tr><td>5</td><td>Actual value 1</td></tr><tr><td>6</td><td>Actual value 2</td></tr></table></td><td></td></tr>
<tr><td></td><td>101…9999</td><td>Drive parameter</td><td></td></tr>
<tr><td>5502</td><td>FBA DATA OUT 2</td><td>See 5501 FBA DATA OUT 1.</td><td></td></tr>
<tr><td>…</td><td>…</td><td>…</td><td></td></tr>
<tr><td>5510</td><td>FBA DATA OUT 10</td><td>See 5501 FBA DATA OUT 1.</td><td></td></tr>
<tr><td colspan="2">84 SEQUENCE PROG</td><td>Sequence programming. See section Sequence programming on page 166.</td><td></td></tr>
<tr><td>8401</td><td>SEQ PROG ENABLE</td><td>Enables Sequence programming.
If Sequence programming enable signal is lost, the Sequence programming is stopped, Sequence programming state (0168 SEQ PROG STATE) is set to 1 and all timers and outputs (RO/TO/AO) are set to zero.</td><td>DISABLED</td></tr>
<tr><td></td><td>DISABLED</td><td>Disabled</td><td>0</td></tr>
<tr><td></td><td>EXT2</td><td>Enabled in external control location 2 (EXT2)</td><td>1</td></tr>
<tr><td></td><td>EXT1</td><td>Enabled in external control location 1 (EXT1)</td><td>2</td></tr>
<tr><td></td><td>EXT1&EXT2</td><td>Enabled in external control locations 1 and 2 (EXT1 and EXT2)</td><td>3</td></tr>
<tr><td></td><td>ALWAYS</td><td>Enabled in external control locations 1 and 2 (EXT1 and EXT2) and in local control (LOCAL)</td><td>4</td></tr>
</table>

All parameters			
No.	**Name/Value**	**Description**	**Def/FbEq**
8402	SEQ PROG START	Selects the source for the Sequence programming activation signal. When Sequence programming is activated, the programming starts from the previously used state. If Sequence programming activation signal is lost, the Sequence programming is stopped and all timers and outputs (RO/TO/AO) are set to zero. Sequence programming state (*0168 SEQ PROG STATE*) remains unchanged. If start from the first Sequence programming state is required, the Sequence programming must be reset by parameter *8404 SEQ PROG RESET*. If start from the first Sequence programming state is always required, reset and start signal sources (*8404* and *8402 SEQ PROG START*) must be through the same digital input. **Note**: The drive will not start if no Run enable signal is received (*1601 RUN ENABLE*).	*NOT SEL*
	DI1(INV)	Sequence programming activation through inverted digital input DI1. 0 = active, 1 = inactive.	-1
	DI2(INV)	See selection *DI1(INV)*.	-2
	DI3(INV)	See selection *DI1(INV)*.	-3
	DI4(INV)	See selection *DI1(INV)*.	-4
	DI5(INV)	See selection *DI1(INV)*.	-5
	NOT SEL	No Sequence programming activation signal	0
	DI1	Sequence programming activation through digital input DI1. 1 = active, 0 = inactive.	1
	DI2	See selection *DI1*.	2
	DI3	See selection *DI1*.	3
	DI4	See selection *DI1*.	4
	DI5	See selection *DI1*.	5
	DRIVE START	Sequence programming activation at drive start	6
	TIMED FUNC 1	Sequence programming is activated by timed function 1. See parameter group *36 TIMED FUNCTIONS*.	7
	TIMED FUNC 2	See selection *TIMED FUNC 1*.	8
	TIMED FUNC 3	See selection *TIMED FUNC 1*.	9
	TIMED FUNC 4	See selection *TIMED FUNC 1*.	10
	RUNNING	Sequence programming is always active.	11
8403	SEQ PROG PAUSE	Selects the source for the Sequence programming pause signal. When Sequence programming pause is activated, all timers and outputs (RO/TO/AO) are frozen. Sequence programming state transition is possible only by parameter *8405 SEQ ST FORCE*.	*NOT SEL*

All parameters			
No.	**Name/Value**	**Description**	**Def/FbEq**
	DI1(INV)	Pause signal through inverted digital input DI1. 0 = active, 1 = inactive.	-1
	DI2(INV)	See selection *DI1(INV)*.	-2
	DI3(INV)	See selection *DI1(INV)*.	-3
	DI4(INV)	See selection *DI1(INV)*.	-4
	DI5(INV)	See selection *DI1(INV)*.	-5
	NOT SEL	No pause signal	0
	DI1	Pause signal through digital input DI1. 1 = active, 0 = inactive.	1
	DI2	See selection *DI1*.	2
	DI3	See selection *DI1*.	3
	DI4	See selection *DI1*.	4
	DI5	See selection *DI1*.	5
	PAUSED	Sequence programming pause enabled	6
8404	SEQ PROG RESET	Selects the source for the Sequence programming reset signal. Sequence programming state (*0168 SEQ PROG STATE*) is set to the first state and all timers and outputs (RO/TO/AO) are set to zero. Reset is possible only when Sequence programming is stopped.	*NOT SEL*
	DI1(INV)	Reset through inverted digital input DI1. 0 = active, 1 = inactive.	-1
	DI2(INV)	See selection *DI1(INV)*.	-2
	DI3(INV)	See selection *DI1(INV)*.	-3
	DI4(INV)	See selection *DI1(INV)*.	-4
	DI5(INV)	See selection *DI1(INV)*.	-5
	NOT SEL	No reset signal	0
	DI1	Reset through digital input DI1. 1 = active, 0 = inactive.	1
	DI2	See selection *DI1*.	2
	DI3	See selection *DI1*.	3
	DI4	See selection *DI1*.	4
	DI5	See selection *DI1*.	5
	RESET	Reset. After reset parameter value is automatically set to *NOT SEL*.	6
8405	SEQ ST FORCE	Forces the Sequence programming to a selected state. **Note:** State is changed only when Sequence programming is paused by parameter *8403 SEQ PROG PAUSE* and this parameter is set to the selected state.	*STATE 1*
	STATE 1	State is forced to state 1.	1
	STATE 2	State is forced to state 2.	2
	STATE 3	State is forced to state 3.	3
	STATE 4	State is forced to state 4.	4

All parameters			
No.	**Name/Value**	**Description**	**Def/FbEq**
	STATE 5	State is forced to state 5.	5
	STATE 6	State is forced to state 6.	6
	STATE 7	State is forced to state 7.	7
	STATE 8	State is forced to state 8.	8
8406	SEQ LOGIC VAL 1	Defines the source for the logic value 1. Logic value 1 is compared to logic value 2 as defined by parameter *8407 SEQ LOGIC OPER 1*. Logic operation values are used in state transitions. See parameter *8425 ST1 TRIG TO ST 2* / *8426 ST1 TRIG TO ST N* selection *LOGIC VAL*.	*NOT SEL*
	DI1(INV)	Logic value 1 through inverted digital input DI1	-1
	DI2(INV)	See selection *DI1(INV)*.	-2
	DI3(INV)	See selection *DI1(INV)*.	-3
	DI4(INV)	See selection *DI1(INV)*.	-4
	DI5(INV)	See selection *DI1(INV)*.	-5
	NOT SEL	No logic value	0
	DI1	Logic value 1 through digital input DI1	1
	DI2	See selection *DI1*.	2
	DI3	See selection *DI1*.	3
	DI4	See selection *DI1*.	4
	DI5	See selection *DI1*.	5
	SUPRV1 OVER	Logic value according to supervision parameters *3201*…*3203*. See parameter group *32 SUPERVISION*.	6
	SUPRV2 OVER	Logic value according to supervision parameters *3204*…*3206*. See parameter group *32 SUPERVISION*.	7
	SUPRV3 OVER	Logic value according to supervision parameters *3207*…*3209*. See parameter group *32 SUPERVISION*.	8
	SUPRV1 UNDER	See selection *SUPRV1 OVER*.	9
	SUPRV2 UNDER	See selection *SUPRV2 OVER*.	10
	SUPRV3 UNDER	See selection *SUPRV3 OVER*.	11
	TIMED FUNC 1	Logic value 1 is activated by timed function 1. See parameter group *36 TIMED FUNCTIONS*. 1 = timed function active.	12
	TIMED FUNC 2	See selection *TIMED FUNC 1*.	13
	TIMED FUNC 3	See selection *TIMED FUNC 1*.	14
	TIMED FUNC 4	See selection *TIMED FUNC 1*.	15
8407	SEQ LOGIC OPER 1	Selects the operation between logic value 1 and 2. Logic operation values are used in state transitions. See parameter *8425 ST1 TRIG TO ST 2* / *8426 ST1 TRIG TO ST N* selection *LOGIC VAL*.	*NOT SEL*

All parameters			
No.	**Name/Value**	**Description**	**Def/FbEq**
	NOT SEL	Logic value 1 (no logic comparison)	0
	AND	Logic function: AND	1
	OR	Logic function: OR	2
	XOR	Logic function: XOR	3
8408	SEQ LOGIC VAL 2	See parameter *8406 SEQ LOGIC VAL 1*.	*NOT SEL*
		See parameter *8406*.	
8409	SEQ LOGIC OPER 2	Selects the operation between logic value 3 and the result of the first logic operation defined by parameter *8407 SEQ LOGIC OPER 1*.	*NOT SEL*
	NOT SEL	Logic value 2 (no logic comparison)	0
	AND	Logic function: AND	1
	OR	Logic function: OR	2
	XOR	Logic function: XOR	3
8410	SEQ LOGIC VAL 3	See parameter *8406 SEQ LOGIC VAL 1*.	*NOT SEL*
		See parameter *8406*.	
8411	SEQ VAL 1 HIGH	Defines the high limit for the state change when parameter *8425 ST1 TRIG TO ST 2* is set to eg *AI 1 HIGH 1*.	0.0%
	0.0…100.0%	Value in percent	1 = 0.1%
8412	SEQ VAL 1 LOW	Defines the low limit for the state change when parameter *8425 ST1 TRIG TO ST 2* is set to eg *AI 1 LOW 1*.	0.0%
	0.0…100.0%	Value in percent	1 = 0.1%
8413	SEQ VAL 2 HIGH	Defines the high limit for the state change when parameter *8425 ST1 TRIG TO ST 2* is set to eg *AI 2 HIGH 1*.	0.0%
	0.0…100.0%	Value in percent	1 = 0.1%
8414	SEQ VAL 2 LOW	Defines the low limit for the state change when parameter *8425 ST1 TRIG TO ST 2* is set to eg *AI 2 LOW 1*.	0.0%
	0.0…100.0%	Value in percent	1 = 0.1%
8415	CYCLE CNT LOC	Activates the cycle counter for Sequence programming. **Example:** When parameter is set to *ST6 TO NEXT*, the cycle count (*0171 SEQ CYCLE CNTR*) increases every time the state changes from state 6 to state 7.	*NOT SEL*
	NOT SEL	Disabled	0
	ST1 TO NEXT	From state 1 to state 2	1
	ST2 TO NEXT	From state 2 to state 3	2
	ST3 TO NEXT	From state 3 to state 4	3
	ST4 TO NEXT	From state 4 to state 5	4
	ST5 TO NEXT	From state 5 to state 6	5
	ST6 TO NEXT	From state 6 to state 7	6
	ST7 TO NEXT	From state 7 to state 8	7
	ST8 TO NEXT	From state 8 to state 1	8

All parameters			
No.	**Name/Value**	**Description**	**Def/FbEq**
	ST1 TO N	From state 1 to state n. State n is defined by parameter *8427 ST1 STATE N*.	9
	ST2 TO N	From state 2 to state n. State n is defined by parameter *8427 ST1 STATE N*.	10
	ST3 TO N	From state 3 to state n. State n is defined by parameter *8427 ST1 STATE N*.	11
	ST4 TO N	From state 4 to state n. State n is defined by parameter *8427 ST1 STATE N*.	12
	ST5 TO N	From state 5 to state n. State n is defined by parameter *8427 ST1 STATE N*.	13
	ST6 TO N	From state 6 to state n. State n is defined by parameter *8427 ST1 STATE N*.	14
	ST7 TO N	From state 7 to state n. State n is defined by parameter *8427 ST1 STATE N*.	15
	ST8 TO N	From state 8 to state n. State n is defined by parameter *8427 ST1 STATE N*.	16
8416	CYCLE CNT RST	Selects the source for the cycle counter reset signal (*0171 SEQ CYCLE CNTR*).	*NOT SEL*
	DI1(INV)	Reset through inverted digital input DI1. 0 = active, 1 = inactive.	-1
	DI2(INV)	See selection *DI1(INV)*.	-2
	DI3(INV)	See selection *DI1(INV)*.	-3
	DI4(INV)	See selection *DI1(INV)*.	-4
	DI5(INV)	See selection *DI1(INV)*.	-5
	NOT SEL	No reset signal	0
	DI1	Reset through digital input DI1. 1 = active, 0 = inactive.	1
	DI2	See selection *DI1*.	2
	DI3	See selection *DI1*.	3
	DI4	See selection *DI1*.	4
	DI5	See selection *DI1*.	5
	STATE 1	Reset during state transition to state 1. Counter is reset, when the state has been reached.	6
	STATE 2	Reset during state transition to state 2. Counter is reset, when the state has been reached.	7
	STATE 3	Reset during state transition to state 3. Counter is reset, when the state has been reached.	8
	STATE 4	Reset during state transition to state 4. Counter is reset, when the state has been reached.	9
	STATE 5	Reset during state transition to state 5. Counter is reset, when the state has been reached.	10
	STATE 6	Reset during state transition to state 6. Counter is reset, when the state has been reached.	11

All parameters			
No.	**Name/Value**	**Description**	**Def/FbEq**
	STATE 7	Reset during state transition to state 7. Counter is reset, when the state has been reached.	12
	STATE 8	Reset during state transition to state 8. Counter is reset, when the state has been reached.	13
	SEQ PROG RST	Reset signal source defined by parameter *8404 SEQ PROG RESET*	14
8420	ST1 REF SEL	Selects the source for the Sequence programming state 1 reference. Parameter is used when parameter *1103 REF1 SELECT* or *1106 REF2 SELECT* is set to *SEQ PROG* / *AI1+SEQ PROG* / *AI2+SEQ PROG*. **Note:** Constant speeds in group *12 CONSTANT SPEEDS* overwrite the selected Sequence programming reference.	0.0%
	COMM	*0136 COMM VALUE 2*. For scaling, see *Fieldbus reference scaling* on page *310*.	-1.3
	AI1/AI2	Reference is calculated with the following equation: REF = AI1(%) · (50% / AI2 (%))	-1.2
	AI1-AI2	Reference is calculated with the following equation: REF = AI1(%) + 50% - AI2(%)	-1.1
	AI1*AI2	Reference is calculated with the following equation: REF = AI1(%) · (AI2(%) / 50%)	-1.0
	AI1+AI2	Reference is calculated with the following equation: REF = AI1(%) + AI2(%) - 50%	-0.9
	DI4U,5D	Digital input DI4: Reference increase. Digital input DI5: Reference decrease.	-0.8
	DI3U,4D	Digital input DI3: Reference increase. Digital input DI4: Reference decrease.	-0.7
	DI3U,4DR	Digital input DI3: Reference increase. Digital input DI4: Reference decrease.	-0.6
	AI2 JOY	Analog input AI2 as joystick. The minimum input signal runs the motor at the maximum reference in the reverse direction, the maximum input at the maximum reference in the forward direction. Minimum and maximum references are defined by parameters *1104 REF1 MIN* and *1105 REF1 MAX*. See parameter *1103 REF1 SELECT* selection *AI1/JOYST* for more information.	-0.5
	AI1 JOY	See selection *AI2 JOY*.	-0.4
	AI2	Analog input AI2	-0.3
	AI1	Analog input AI1	-0.2
	KEYPAD	Control panel	-0.1
	0.0 …100.0%	Constant speed	1 = 0.1%
8421	ST1 COMMANDS	Selects the start, stop and direction for state 1. Parameter *1002 EXT2 COMMANDS* must be set to *SEQ PROG*. **Note:** If change of direction of rotation is required, parameter *1003 DIRECTION* must be set to *REQUEST*.	*DRIVE STOP*

All parameters			
No.	**Name/Value**	**Description**	**Def/FbEq**
	DRIVE STOP	Drive coast or ramps to stop depending on parameter *2102 STOP FUNCTION* setting.	0
	START FRW	Direction or rotation is fixed to forward. If the drive is not already running, it is started according to parameter *2101 START FUNCTION* settings.	1
	START REV	Direction or rotation is fixed to reverse. If the drive is not already running, it is started according to parameter *2101 START FUNCTION* settings.	2
8422	ST1 RAMP	Selects the acceleration/deceleration ramp time for Sequence programming state 1, ie defines the rate of the reference change.	0.0 s
	-0.2/-0.1/ 0.0…1800.0 s	Time When value is set to -0.2, ramp pair 2 is used. Ramp pair 2 is defined by parameters *2205*…*2207*. When value is set to -0.1, ramp pair 1 is used. Ramp pair 1 is defined by parameters *2202*…*2204*. With ramp pair 1/2, parameter *2201 ACC/DEC 1/2 SEL* must be set to *SEQ PROG*. See also parameters *2202*…*2207*.	1 = 0.1 s
8423	ST1 OUT CONTROL	Selects the relay, transistor and analog output control for Sequence programming state 1. The relay/transistor output control must be activated by setting parameter *1401 RELAY OUTPUT 1* / *1805 DO SIGNAL* to *SEQ PROG*. Analog output control must be activated by parameter group *15 ANALOG OUTPUTS*. Analog output control values can be monitored with signal *0170 SEQ PROG AO VAL*.	*AO=0*
	R=0,D=1,AO=0	Relay output is de-energized (opened), transistor output is energized and analog output is cleared.	-0.7
	R=1,D=0,AO=0	Relay output is energized (closed), transistor output is de-energized and analog output is cleared.	-0.6
	R=0,D=0,AO=0	Relay and transistor outputs are de-energized (opened) and analog output value is set to zero.	-0.5
	RO=0,DO=0	Relay and transistor outputs are de-energized (opened) and analog output control is frozen to the previously set value.	-0.4
	RO=1,DO=1	Relay and transistor outputs are energized (closed) and analog output control is frozen to the previously set value.	-0.3
	DO=1	Transistor output is energized (closed) and relay output is de-energized. Analog output control is frozen to the previously set value.	-0.2
	RO=1	Transistor output is de-energized (opened) and relay output is energized. Analog output control is frozen to the previously set value.	-0.1

All parameters			
No.	**Name/Value**	**Description**	**Def/FbEq**
	AO=0	Analog output value is set to zero. Relay and transistor outputs are frozen to the previously set value.	0.0
	0.1…100.0%	Value written to signal *0170 SEQ PROG AO VAL*. Value can be connected to control analog output AO by setting parameter *1501 AO1 CONTENT SEL* value to 170 (ie signal *0170 SEQ PROG AO VAL*). AO value is frozen to this value until it is zeroed.	
8424	ST1 CHANGE DLY	Defines the delay time for state 1. When delay has elapsed, state transition is allowed. See parameters *8425 ST1 TRIG TO ST 2* and *8426 ST1 TRIG TO ST N*.	0.0 s
	0.0…6553.5 s	Delay time	1 = 0.1 s
8425	ST1 TRIG TO ST 2	Selects the source for the trigger signal which changes the state from state 1 to state 2. **Note:** State change to state N (*8426 ST1 TRIG TO ST N*) has a higher priority than state change to the next state (*8425 ST1 TRIG TO ST 2*).	*NOT SEL*
	DI1(INV)	Trigger through inverted digital input DI1. 0 = active, 1 = inactive.	-1
	DI2(INV)	See selection *DI1(INV)*.	-2
	DI3(INV)	See selection *DI1(INV)*.	-3
	DI4(INV)	See selection *DI1(INV)*.	-4
	DI5(INV)	See selection *DI1(INV)*.	-5
	NOT SEL	No trigger signal. If parameter *8426 ST1 TRIG TO ST N* setting is also *NOT SEL*, the state is frozen and can be reset only with parameter *8402 SEQ PROG START*.	0
	DI1	Trigger through digital input DI1. 1 = active, 0 = inactive.	1
	DI2	See selection *DI1*.	2
	DI3	See selection *DI1*.	3
	DI4	See selection *DI1*.	4
	DI5	See selection *DI1*.	5
	AI 1 LOW 1	State change when AI1 value < par. *8412 SEQ VAL 1 LOW* value.	6
	AI 1 HIGH 1	State change when AI1 value > par. *8411 SEQ VAL 1 HIGH* value.	7
	AI 2 LOW 1	State change when AI2 value < par. *8412 SEQ VAL 1 LOW* value.	8
	AI 2 HIGH 1	State change when AI2 value > par. *8411 SEQ VAL 1 HIGH* value.	9
	AI1 OR 2 LO1	State change when AI1 or AI2 value < par. *8412 SEQ VAL 1 LOW* value.	10
	AI1LO1AI2HI1	State change when AI1 value < par. *8412 SEQ VAL 1 LOW* value and AI2 value > par. *8411 SEQ VAL 1 HIGH* value.	11

All parameters			
No.	**Name/Value**	**Description**	**Def/FbEq**
	AI1LO1 ORDI5	State change when AI1 value < par. *8412 SEQ VAL 1 LOW* value or when DI5 is active.	12
	AI2HI1 ORDI5	State change when AI2 value > par. *8411 SEQ VAL 1 HIGH* value or when DI5 is active.	13
	AI 1 LOW 2	State change when AI1 value < par. *8414 SEQ VAL 2 LOW* value.	14
	AI 1 HIGH 2	State change when AI1 value > par. *8413 SEQ VAL 2 HIGH* value.	15
	AI 2 LOW 2	State change when AI2 value < par. *8414 SEQ VAL 2 LOW* value.	16
	AI 2 HIGH 2	State change when AI2 value > par. *8413 SEQ VAL 2 HIGH* value.	17
	AI1 OR 2 LO2	State change when AI1 or AI2 value < par. *8414 SEQ VAL 2 LOW* value.	18
	AI1LO2AI2HI2	State change when AI1 value < par. *8414 SEQ VAL 2 LOW* value and AI2 value > par. *8413 SEQ VAL 2 HIGH* value.	19
	AI1LO2 ORDI5	State change when AI1 value < par. *8414 SEQ VAL 2 LOW* value or when DI5 is active.	20
	AI2HI2 ORDI5	State change when AI2 value > par. *8413 SEQ VAL 2 HIGH* value or when DI5 is active.	21
	TIMED FUNC 1	Trigger with timed function 1. See parameter group *36 TIMED FUNCTIONS*.	22
	TIMED FUNC 2	See selection *TIMED FUNC 1*.	23
	TIMED FUNC 3	See selection *TIMED FUNC 1*.	24
	TIMED FUNC 4	See selection *TIMED FUNC 1*.	25
	CHANGE DLY	State change after delay time defined by parameter *8424 ST1 CHANGE DLY* has elapsed.	26
	DI1 OR DELAY	State change after DI1 activation or after delay time defined by parameter *8424 ST1 CHANGE DLY* has elapsed.	27
	DI2 OR DELAY	See selection *DI1 OR DELAY*.	28
	DI3 OR DELAY	See selection *DI1 OR DELAY*.	29
	DI4 OR DELAY	See selection *DI1 OR DELAY*.	30
	DI5 OR DELAY	See selection *DI1 OR DELAY*.	31
	AI1HI1 ORDLY	State change when AI1 value > par. *8411 SEQ VAL 1 HIGH* value or after delay time defined by parameter *8424 ST1 CHANGE DLY* has elapsed.	32
	AI2LO1 ORDLY	State change when AI1 value < par. *8412 SEQ VAL 1 LOW* value or after delay time defined by parameter *8424 ST1 CHANGE DLY* has elapsed.	33
	AI1HI2 ORDLY	State change when AI1 value > par. *8413 SEQ VAL 2 HIGH* value or after delay time defined by parameter *8424 ST1 CHANGE DLY* has elapsed.	34

All parameters			
No.	**Name/Value**	**Description**	**Def/FbEq**
	AI2LO2 ORDLY	State change when AI2 value < par. *8414 SEQ VAL 2 LOW* value or after delay time defined by parameter *8424 ST1 CHANGE DLY* has elapsed.	35
	SUPRV1 OVER	Logic value according to supervision parameters *3201*…*3203*. See parameter group *32 SUPERVISION*.	36
	SUPRV2 OVER	Logic value according to supervision parameters *3204*…*3206*. See parameter group *32 SUPERVISION*.	37
	SUPRV3 OVER	Logic value according to supervision parameters *3207*…*3209*. See parameter group *32 SUPERVISION*.	38
	SUPRV1 UNDER	See selection *SUPRV1 OVER*.	39
	SUPRV2 UNDER	See selection *SUPRV2 OVER*.	40
	SUPRV3 UNDER	See selection *SUPRV3 OVER*.	41
	SPV1OVRORDLY	State change according to supervision parameters *3201*…*3203* or when delay time defined by parameter *8424 ST1 CHANGE DLY* has elapsed. See parameter group *32 SUPERVISION*.	42
	SPV2OVRORDLY	State change according to supervision parameters *3204*…*3206* or when delay time defined by parameter *8424 ST1 CHANGE DLY* has elapsed. See parameter group *32 SUPERVISION*.	43
	SPV3OVRORDLY	State change according to supervision parameters *3207*…*3209* or when delay time defined by parameter *8424 ST1 CHANGE DLY* has elapsed. See parameter group *32 SUPERVISION*.	44
	SPV1UNDORDLY	See selection *SPV1OVRORDLY*.	45
	SPV2UNDORDLY	See selection *SPV2OVRORDLY*.	46
	SPV3UNDORDLY	See selection *SPV3OVRORDLY*.	47
	CNTR OVER	State change when counter value exceeds the limit defined by par. *1905 COUNTER LIMIT*. See parameters *1904*…*1911*.	48
	CNTR UNDER	State change when counter value is below the limit defined by par. *1905 COUNTER LIMIT*. See parameters *1904*…*1911*.	49
	LOGIC VAL	State change according to logic operation defined by parameters *8406*…*8410*	50
	ENTER SETPNT	State change when drive output frequency/speed enters the reference area (ie the difference is less than or equal to 4% of the maximum reference).	51

All parameters			
No.	**Name/Value**	**Description**	**Def/FbEq**
	AT SETPOINT	State change when drive output frequency/speed equals the reference value (= is within tolerance limits, ie the error is less than or equal to 1% of the maximum reference).	52
	AI1 L1 & DI5	State change when AI1 value < par. *8412 SEQ VAL 1 LOW* and when DI5 is active.	53
	AI2 L2 & DI5	State change when AI2 value < par. *8414 SEQ VAL 2 LOW* value and when DI5 is active.	54
	AI1 H1 & DI5	State change when AI1 value > par. *8411 SEQ VAL 1 HIGH* value and when DI5 is active.	55
	AI2 H2 & DI5	State change when AI2 value > par. *8413 SEQ VAL 2 HIGH* value and when DI5 is active.	56
	AI1 L1 & DI4	State change when AI1 value < par. *8412 SEQ VAL 1 LOW* value and when DI4 is active.	57
	AI2 L2 & DI4	State change when AI2 value < par. *8414 SEQ VAL 2 LOW* value and when DI4 is active.	58
	AI1 H1 & DI4	State change when AI1 value > par. *8411 SEQ VAL 1 HIGH* value and when DI4 is active.	59
	AI2 H2 & DI4	State change when AI2 value > par. *8413 SEQ VAL 2 HIGH* value and when DI4 is active.	60
	DLY AND DI1	State change when delay time defined by parameter *8424 ST1 CHANGE DLY* has elapsed and DI1 is active.	61
	DLY AND DI2	State change when delay time defined by parameter *8424 ST1 CHANGE DLY* has elapsed and DI2 is active.	62
	DLY AND DI3	State change when delay time defined by parameter *8424 ST1 CHANGE DLY* has elapsed and DI3 is active.	63
	DLY AND DI4	State change when delay time defined by parameter *8424 ST1 CHANGE DLY* has elapsed and DI4 is active.	64
	DLY AND DI5	State change when delay time defined by parameter *8424 ST1 CHANGE DLY* has elapsed and DI5 is active.	65
	DLY & AI2 H2	State change when delay time defined by parameter *8424 ST1 CHANGE DLY* has elapsed and AI2 value > par. *8413 SEQ VAL 2 HIGH* value.	66
	DLY & AI2 L2	State change when delay time defined by parameter *8424 ST1 CHANGE DLY* has elapsed and AI2 value < par. *8414 SEQ VAL 2 LOW* value.	67
	DLY & AI1 H1	State change when delay time defined by parameter *8424 ST1 CHANGE DLY* has elapsed and AI1 value > par. *8411 SEQ VAL 1 HIGH* value.	68
	DLY & AI1 L1	State change when delay time defined by parameter *8424 ST1 CHANGE DLY* has elapsed and AI1 value < par. *8412 SEQ VAL 1 LOW* value.	69
	COMM VAL1 #0	*0135 COMM VALUE 1* bit 0. 1 = state change.	70
	COMM VAL1 #1	*0135 COMM VALUE 1* bit 1. 1 = state change.	71

All parameters			
No.	**Name/Value**	**Description**	**Def/FbEq**
	COMM VAL1 #2	*0135 COMM VALUE 1* bit 2. 1 = state change.	72
	COMM VAL1 #3	*0135 COMM VALUE 1* bit 3. 1 = state change.	73
	COMM VAL1 #4	*0135 COMM VALUE 1* bit 4. 1 = state change.	74
	COMM VAL1 #5	*0135 COMM VALUE 1* bit 5. 1 = state change.	75
	COMM VAL1 #6	*0135 COMM VALUE 1* bit 6. 1 = state change.	76
	COMM VAL1 #7	*0135 COMM VALUE 1* bit 7. 1 = state change.	77
	AI2H2DI4SV1O	State change according to supervision parameters *3201*…*3203* when AI2 value > par. *8413 SEQ VAL 2 HIGH* value and DI4 is active.	78
	AI2H2DI5SV1O	State change according to supervision parameters *3201*…*3203* when AI2 value > par. *8413 SEQ VAL 2 HIGH* value and DI5 is active.	79
	STO	State change when STO (Safe torque off) has been triggered.	80
	STO(-1)	State change when STO (Safe torque off) becomes inactive and the drive operates normally.	81
8426	ST1 TRIG TO ST N	Selects the source for the trigger signal which changes the state from state 1 to state N. State N is defined with parameter *8427 ST1 STATE N*. **Note:** State change to state N (*8426 ST1 TRIG TO ST N*) has a higher priority than state change to the next state (*8425 ST1 TRIG TO ST 2*).	*NOT SEL*
		See parameter *8425 ST1 TRIG TO ST 2*.	
8427	ST1 STATE N	Defines the state N. See parameter *8426 ST1 TRIG TO ST N*.	*STATE 1*
	STATE 1	State 1	1
	STATE 2	State 2	2
	STATE 3	State 3	3
	STATE 4	State 4	4
	STATE 5	State 5	5
	STATE 6	State 6	6
	STATE 7	State 7	7
	STATE 8	State 8	8
8430	ST2 REF SEL	See parameters *8420*…*8427*.	
…			
8497	ST8 STATE N		

All parameters			
No.	**Name/Value**	**Description**	**Def/FbEq**
98 OPTIONS		External serial communication activation	
9802	COMM PROT SEL	Activates the external serial communication and selects the interface.	*NOT SEL*
	NOT SEL	No communication	0
	STD MODBUS	Embedded fieldbus. Interface: EIA-485 provided by optional FMBA-01 Modbus adapter connected to drive terminal X3. See chapter *Fieldbus control with embedded fieldbus* on page *301*.	1
	EXT FBA	The drive communicates through a fieldbus adapter module connected to drive terminal X3. See also parameter group *51 EXT COMM MODULE*. See chapter *Fieldbus control with fieldbus adapter* on page *325*.	4
	MODBUS RS232	Embedded fieldbus. Interface: RS-232 (ie control panel connector). See chapter *Fieldbus control with fieldbus adapter* on page *325*.	10
99 START-UP DATA		Language selection. Definition of motor set-up data.	
9901	LANGUAGE	Selects the display language used on the assistant control panel. **Note:** With the ACS-CP-D assistant control panel, the following languages are available: English (0), Chinese (1), Korean (2) and Japanese (3).	*ENGLISH*
	ENGLISH	British English	0
	ENGLISH (AM)	American English	1
	DEUTSCH	German	2
	ITALIANO	Italian	3
	ESPAÑOL	Spanish	4
	PORTUGUES	Portuguese	5
	NEDERLANDS	Dutch	6
	FRANÇAIS	French	7
	DANSK	Danish	8
	SUOMI	Finnish	9
	SVENSKA	Swedish	10
	RUSSKI	Russian	11
	POLSKI	Polish	12
	TÜRKÇE	Turkish	13
	CZECH	Czech	14
	MAGYAR	Hungarian	15
	ELLINIKA	Greek	16
9902	APPLIC MACRO	Selects the application macro. See chapter *Application macros* on page *109*.	*ABB STANDARD*

All parameters			
No.	**Name/Value**	**Description**	**Def/FbEq**
	ABB STANDARD	Standard macro for constant speed applications	1
	3-WIRE	3-wire macro for constant speed applications	2
	ALTERNATE	Alternate macro for start forward and start reverse applications	3
	MOTOR POT	Motor potentiometer macro for digital signal speed control applications	4
	HAND/AUTO	Hand/Auto macro to be used when two control devices are connected to the drive: • Device 1 communicates through the interface defined by external control location EXT1. • Device 2 communicates through the interface defined by external control location EXT2. EXT1 or EXT2 is active at a time. Switching between EXT1/2 through digital input.	5
	PID CONTROL	PID control. For applications in which the drive controls a process value, eg pressure control by the drive running the pressure boost pump. Measured pressure and the pressure reference are connected to the drive.	6
	TORQUE CTRL	Torque control macro	8
	LOAD FD SET	FlashDrop parameter values as defined by the FlashDrop file. Parameter view is selected by parameter *1611 PARAMETER VIEW*. FlashDrop is an optional device for fast copying of parameters to unpowered drives. FlashDrop allows easy customization of the parameter list, eg selected parameters can be hidden. For more information, see *MFDT-01 FlashDrop user's manual* (3AFE68591074 [English]).	31
	USER S1 LOAD	User 1 macro loaded into use. Before loading, check that the saved parameter settings and the motor model are suitable for the application.	0
	USER S1 SAVE	Save User 1 macro. Stores the current parameter settings and the motor model.	-1
	USER S2 LOAD	User 2 macro loaded into use. Before loading, check that the saved parameter settings and the motor model are suitable for the application.	-2
	USER S2 SAVE	Save User 2 macro. Stores the current parameter settings and the motor model.	-3
	USER S3 LOAD	User 3 macro loaded into use. Before loading, check that the saved parameter settings and the motor model are suitable for the application.	-4
	USER S3 SAVE	Save User 3 macro. Stores the current parameter settings and the motor model.	-5

All parameters			
No.	**Name/Value**	**Description**	**Def/FbEq**
9903	MOTOR TYPE	Selects the motor type. Cannot be changed while the drive is running.	*AM*
	AM	Asynchronous motor. Three-phase AC voltage-supplied induction motor with squirrel cage rotor.	1
	PMSM	Permanent magnet motor. Three-phase AC voltage-supplied synchronous motor with permanent magnet rotor and sinusoidal back emf voltage.	2
9904	MOTOR CTRL MODE	Selects the motor control mode.	*SCALAR: FREQ*
	VECTOR: SPEED	Sensorless vector control mode. Reference 1 = speed reference in rpm. Reference 2 = speed reference in percent. 100% is the absolute maximum speed, equal to the value of parameter *2002 MAXIMUM SPEED* (or *2001 MINIMUM SPEED* if the absolute value of the minimum speed is greater than the maximum speed value).	1
	VECTOR: TORQ	Vector control mode. Reference 1 = speed reference in rpm. Reference 2 = torque reference in percent. 100% equals nominal torque.	2
	SCALAR: FREQ	Scalar control mode. Reference 1 = frequency reference in Hz. Reference 2 = frequency reference in percent. 100% is the absolute maximum frequency, equal to the value of parameter *2008 MAXIMUM FREQ* (or *2007 MINIMUM FREQ* if the absolute value of the minimum speed is greater than the maximum speed value).	3

All parameters			
No.	**Name/Value**	**Description**	**Def/FbEq**
9905	MOTOR NOM VOLT	Defines the nominal motor voltage. For asynchronous motors, must be equal to the value on the motor rating plate. For permanent magnet motors, the nominal voltage is the back emf voltage at nominal speed. If the voltage is given as voltage per rpm, eg 60 V per 1000 rpm, the voltage for 3000 rpm nominal speed is 3 · 60 V = 180 V. The drive cannot supply the motor with a voltage greater than the input power voltage. Note that the output voltage is not limited by the nominal motor voltage but increased linearly up to the value of the input voltage. 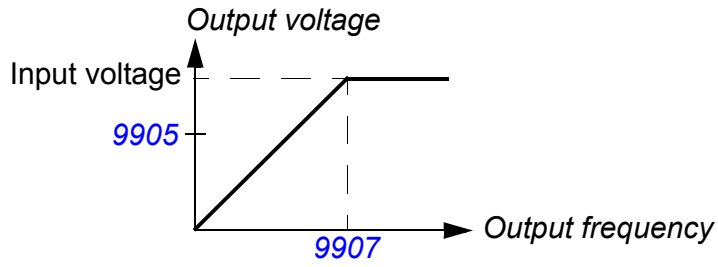 **WARNING!** Never connect a motor to a drive which is connected to power line with voltage level higher than the rated motor voltage.	200 V units: 230 V 400 V E units: 400 V 400 V U units: 460 V
	200 V units: 115…345 V 400 V E units: 200…600 V 400 V U units: 230…690 V	Voltage. **Note:** The stress on the motor insulations is always dependent on the drive supply voltage. This also applies to the case where the motor voltage rating is lower than the rating of the drive and the supply of the drive.	1 = 1 V
9906	MOTOR NOM CURR	Defines the nominal motor current. Must be equal to the value on the motor rating plate.	I_{2N}
	0.2…2.0 · I_{2N}	Current	1 = 0.1 A
9907	MOTOR NOM FREQ	Defines the nominal motor frequency, ie the frequency at which the output voltage equals the motor nominal voltage: Field weakening point = Nom. frequency · Supply voltage / Motor nom. voltage	E: 50.0 Hz U: 60.0 Hz
	10.0…500.0 Hz	Frequency	1 = 0.1 Hz
9908	MOTOR NOM SPEED	Defines the nominal motor speed. Must be equal to the value on the motor rating plate.	Type dependent
	50…30000 rpm	Speed	1 = 1 rpm
9909	MOTOR NOM POWER	Defines the nominal motor power. Must equal the value on the motor rating plate.	P_N
	0.2…3.0 · P_N kW	Power	1 = 0.1 kW / 0.1 hp

All parameters			
No.	**Name/Value**	**Description**	**Def/FbEq**
9910	ID RUN	This parameter controls a self-calibration process called the Motor ID run. During this process, the drive operates the motor and makes measurements to identify motor characteristics and create a model used for internal calculations.	*OFF/IDMAGN*
	OFF/IDMAGN	The Motor ID run process is not run. Identification magnetization is performed, depending on parameter *9904 MOTOR CTRL MODE*. In identification magnetization, the motor model is calculated at first start by magnetizing the motor for 10 to 15 s at zero speed (motor not rotating, except that a permanent magnet motor can rotate a fraction of a revolution). The model is recalculated always at start after motor parameter changes. • Parameter *9904* = 1 (*VECTOR: SPEED*) or 2 (*VECTOR: TORQ*): Identification magnetization is performed. • Parameter *9904* = 3 (*SCALAR: FREQ*): Identification magnetization is not performed.	0
	ON	ID run. Guarantees the best possible control accuracy. The ID run takes about one minute. An ID run is especially effective when: • vector control mode is used (parameter *9904* = 1 [*VECTOR: SPEED*] or 2 [*VECTOR: TORQ*]), and • operation point is near zero speed and/or • operation requires a torque range above the motor nominal torque, over a wide speed range, and without any measured speed feedback (ie without a pulse encoder). **Note:** The motor must be de-coupled from the driven equipment. **Note:** Check the direction of rotation of the motor before starting the ID run. During the run, the motor will rotate in the forward direction. **Note:** If motor parameters are changed after ID run, repeat the ID run. ⚠ **WARNING!** The motor will run at up to approximately 50…80% of the nominal speed during the ID run. ENSURE THAT IT IS SAFE TO RUN THE MOTOR BEFORE PERFORMING THE ID RUN!	1
9912	MOTOR NOM TORQUE	Calculated motor nominal torque in N·m (calculation is based on parameter *9909 MOTOR NOM POWER* and *9908 MOTOR NOM SPEED* values).	0
	0…3000.0 N·m	Read-only	1 = 0.1 N·m

All parameters			
No.	**Name/Value**	**Description**	**Def/FbEq**
9913	MOTOR POLE PAIRS	Calculated motor pole pair number (calculation is based on parameter *9907 MOTOR NOM FREQ* and *9908 MOTOR NOM SPEED* values).	0
	-	Read-only	1 = 1
9914	PHASE INVERSION	Inverts two phases in the motor cable. This changes the direction of the motor rotation without having to exchange the positions of two motor cable phase conductors at the drive output terminals or at the motor connection box.	*NO*
	NO	Phases not inverted	0
	YES	Phases inverted	1

13

Fieldbus control with embedded fieldbus

What this chapter contains

The chapter describes how the drive can be controlled by external devices over a communication network using embedded fieldbus.

System overview

The drive can be connected to an external control system through a fieldbus adapter or embedded fieldbus. For fieldbus adapter control, see chapter *Fieldbus control with fieldbus adapter* on page 325.

The embedded fieldbus supports Modbus RTU protocol. Modbus is a serial, asynchronous protocol. Transaction is half-duplex.

The embedded fieldbus can be connected with either RS-232 (control panel connector X2) or EIA-485 (terminal X1 of the optional FMBA-01 Modbus adapter connected to drive terminal X3). The maximum length of the communication cable with RS-232 is restricted to 3 meters. For more information on the FMBA-01 Modbus adapter module, see *FMBA-01 Modbus adapter module user's manual* (3AFE68586704 [English]).

RS-232 is designed for a point-to-point application (a single master controlling one slave). EIA-485 is designed for a multipoint application (a single master controlling one or more slaves).

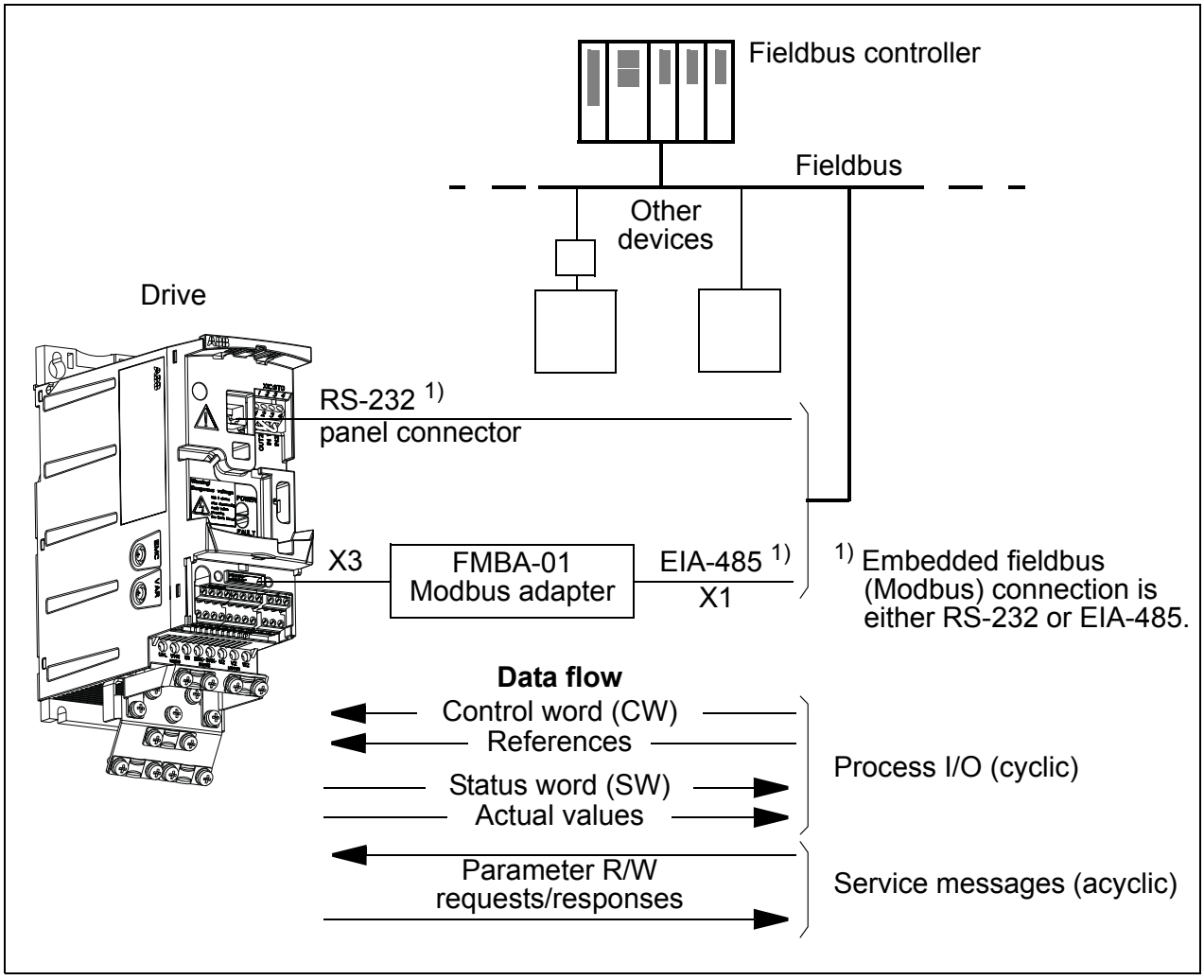

The drive can be set to receive all of its control information through the fieldbus interface, or the control can be distributed between the fieldbus interface and other available sources, eg digital and analog inputs.

Setting up communication through the embedded Modbus

Before configuring the drive for fieldbus control, the FMBA-01 Modbus adapter (if used) must be mechanically and electrically installed according to the instructions given in section *Attach the optional fieldbus module* on page *35*, and the module manual.

The communication through the fieldbus link is initialized by setting parameter *9802 COMM PROT SEL* to *STD MODBUS* or *MODBUS RS232*. The communication parameters in group *53 EFB PROTOCOL* must also be adjusted. See the table below.

Parameter	Alternative settings	Setting for fieldbus control	Function/Information
COMMUNICATION INITIALIZATION			
9802 COMM PROT SEL	*NOT SEL* *STD MODBUS* *EXT FBA* *MODBUS RS232*	*STD MODBUS* (with EIA-485) *MODBUS RS232* (with RS-232)	Initializes embedded fieldbus communication.
ADAPTER MODULE CONFIGURATION			
5302 EFB STATION ID	0…247	Any	Defines the station ID address of the RS-232/EIA-485 link. No two stations on line may have the same address.
5303 EFB BAUD RATE	1.2 kbit/s 2.4 kbit/s 4.8 kbit/s 9.6 kbit/s 19.2 kbit/s 38.4 kbit/s 57.6 kbit/s 115.2 kbit/s		Defines the communication speed of the RS-232/EIA-485 link.
5304 EFB PARITY	*8 NONE 1* *8 NONE 2* *8 EVEN 1* *8 ODD 1*		Selects the parity setting. The same settings must be used in all on-line stations.
5305 EFB CTRL PROFILE	*ABB DRV LIM* *DCU PROFILE* *ABB DRV FULL*	Any	Selects the communication profile used by the drive. See section *Communication profiles* on page *315*.
5310 EFB PAR 10 … *5317 EFB PAR 17*	0…65535	Any	Selects an actual value to be mapped to Modbus register 400xx.

After the configuration parameters in group *53 EFB PROTOCOL* have been set, the drive control parameters (shown in section *Drive control parameters* on page *304*) must be checked and adjusted when necessary.

The new settings will take effect when the drive is next powered up, or when parameter *5302 EFB STATION ID* setting is cleared and reset.

Drive control parameters

After the Modbus communication has been set up, the drive control parameters listed in the table below should be checked and adjusted when necessary.

The **Setting for fieldbus control** column gives the value to use when the Modbus interface is the desired source or destination for that particular signal. The **Function/Information** column gives a description of the parameter.

Parameter	Setting for fieldbus control	Function/Information	Modbus register address	
CONTROL COMMAND SOURCE SELECTION			ABB DRV	DCU
1001 EXT1 COMMANDS	*COMM*	Enables *0301 FB CMD WORD 1* bits 0…1 (*STOP*/*START*) when EXT1 is selected as the active control location.		40031 bits 0…1
1002 EXT2 COMMANDS	*COMM*	Enables *0301 FB CMD WORD 1* bits 0…1 (*STOP*/*START*) when EXT2 is selected as the active control location.		40031 bits 0…1
1003 DIRECTION	*FORWARD* *REVERSE* *REQUEST*	Enables the rotation direction control as defined by parameters *1001* and *1002*. The direction control is explained in section *Reference handling* on page *311*.		40031 bit 2
1010 JOGGING SEL	*COMM*	Enables jogging 1 or 2 activation through *0302 FB CMD WORD 2* bits 20…21 (*JOGGING 1* / *JOGGING 2*).		40032 bits 20…21
1102 EXT1/EXT2 SEL	*COMM*	Enables EXT1/EXT2 selection through *0301 FB CMD WORD 1* bit 5 (*EXT2*); with the ABB drives profile *5319 EFB PAR 19* bit 11 (*EXT CTRL LOC*).	40001 bit 11	40031 bit 5
1103 REF1 SELECT	*COMM* *COMM+AI1* *COMM*AI1*	Fieldbus reference REF1 is used when EXT1 is selected as the active control location. See section *Fieldbus references* on page *308* for information on the alternative settings.	40002 for REF1	
1106 REF2 SELECT	*COMM* *COMM+AI1* *COMM*AI1*	Fieldbus reference REF2 is used when EXT2 is selected as the active control location. See section *Fieldbus references* on page *308* for information on the alternative settings.	40003 for REF2	

Parameter	Setting for fieldbus control	Function/Information	Modbus register address	
OUTPUT SIGNAL SOURCE SELECTION			ABB DRV	DCU
1401 RELAY OUTPUT 1	*COMM COMM(-1)*	Enables relay output RO control by signal *0134 COMM RO WORD*.	40134 for signal *0134*	
1501 AO1 CONTENT SEL	135	Directs the contents of the fieldbus reference *0135 COMM VALUE 1* to analog output AO.	40135 for signal *0135*	

SYSTEM CONTROL INPUTS			ABB DRV	DCU
1601 RUN ENABLE	*COMM*	Enables the control of the inverted Run enable signal (Run disable) through *0301 FB CMD WORD 1* bit 6 (*RUN_DISABLE*); with the ABB drives profile *5319 EFB PAR 19* bit 3 (*INHIBIT OPERATION*).	40001 bit 3	40031 bit 6
1604 FAULT RESET SEL	*COMM*	Enables fault reset through the fieldbus *0301 FB CMD WORD 1* bit 4 (*RESET*); with the ABB drives profile *5319 EFB PAR 19* bit 7 (*RESET*).	40001 bit 7	40031 bit 4
1606 LOCAL LOCK	*COMM*	Local control mode lock signal through *0301 FB CMD WORD 1* bit 14 (*REQ_LOCALLOC*)	-	40031 bit 14
1607 PARAM SAVE	*DONE SAVE…*	Saves parameter value changes (including those made through fieldbus control) to permanent memory.	41607	
1608 START ENABLE 1	*COMM*	Inverted Start enable 1 (Start disable) through *0302 FB CMD WORD 2* bit 18 (*START_DISABLE1*)	-	40032 bit 18
1609 START ENABLE 2	*COMM*	Inverted Start enable 2 (Start disable) through *0302 FB CMD WORD 2* bit 19 (*START_DISABLE2*)	-	40032 bit 19

LIMITS			ABB DRV	DCU
2013 MIN TORQUE SEL	*COMM*	Minimum torque limit 1/2 selection through *0301 FB CMD WORD 1* bit 15 (*TORQLIM2*)	-	40031 bit 15
2014 MAX TORQUE SEL	*COMM*	Maximum torque limit 1/2 selection through *0301 FB CMD WORD 1* bit 15 (*TORQLIM2*)	-	40031 bit 15
2201 ACC/DEC 1/2 SEL	*COMM*	Acceleration/deceleration ramp pair selection through *0301 FB CMD WORD 1* bit 10 (*RAMP_2*)	-	40031 bit 10

Parameter	Setting for fieldbus control	Function/Information	Modbus register address	
2209 RAMP INPUT 0	*COMM*	Ramp input to zero through *0301 FB CMD WORD 1* bit 13 (*RAMP_IN_0*); with the ABB drives profile *5319 EFB PAR 19* bit 6 (*RAMP_IN_ ZERO*)	40001 bit 6	40031 bit 13

COMMUNICATION FAULT FUNCTIONS			ABB DRV	DCU
3018 COMM FAULT FUNC	*NOT SEL* *FAULT* *CONST SP 7* *LAST SPEED*	Determines the drive action in case the fieldbus communication is lost.	43018	
3019 COMM FAULT TIME	0.1… 600.0 s	Defines the time between the communication loss detection and the action selected with parameter *3018 COMM FAULT FUNC*.	43019	

PID CONTROLLER REFERENCE SIGNAL SOURCE SELECTION			ABB DRV	DCU
4010/ *4110*/ *4210 SET POINT SEL*	*COMM* *COMM+AI1* *COMM*AI1*	PID control reference (REF2)	40003 for REF2	

Fieldbus control interface

The communication between a fieldbus system and the drive consists of 16-bit input and output data words (with the ABB drives profile) and 32-bit input and output words (with the DCU profile).

Control word and Status word

The Control word (CW) is the principal means of controlling the drive from a fieldbus system. The Control word is sent by the fieldbus controller to the drive. The drive switches between its states according to the bit-coded instructions of the Control word.

The Status word (SW) is a word containing status information, sent by the drive to the fieldbus controller.

References

References (REF) are 16-bit signed integers. A negative reference (eg reverse direction of rotation) is formed by calculating the two's complement from the corresponding positive reference value. The contents of each reference word can be used as the speed, frequency, torque or process reference.

Actual values

Actual values (ACT) are 16-bit words containing selected values of the drive.

Fieldbus references

Reference selection and correction

Fieldbus reference (called COMM in signal selection contexts) is selected by setting a reference selection parameter – *1103 REF1 SELECT* or *1106 REF2 SELECT* – to *COMM*, *COMM+AI1* or *COMM*AI1*. When parameter *1103* or *1106* is set to *COMM*, the fieldbus reference is forwarded as such without correction. When parameter *1103* or *1106* is set to *COMM+AI1* or *COMM*AI1*, the fieldbus reference is corrected using analog input AI1 as shown in the following examples for the ABB drives profile.

<table>
<tr><th>Setting</th><th>When COMM ≥ 0</th><th>When COMM ≤ 0</th></tr>
<tr><td rowspan="3">COMM +AI1</td><td>COMM(%) · (MAX-MIN) + MIN
+ (AI(%) - 50%) · (MAX-MIN)</td><td>COMM(%) · (MAX-MIN) - MIN
+ (AI(%) - 50%) · (MAX-MIN)</td></tr>
<tr><td> 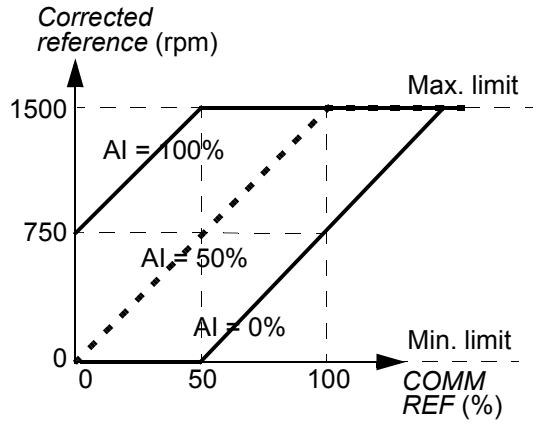
</td><td> 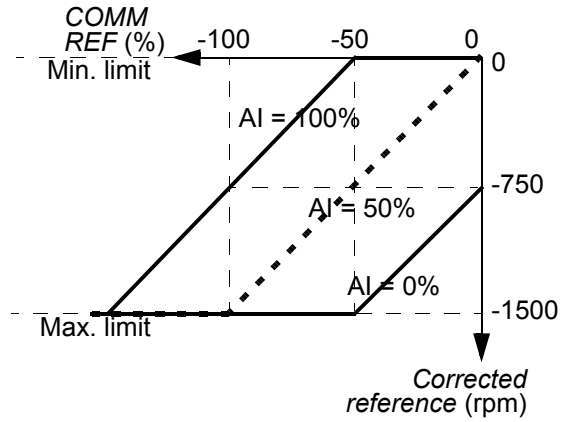
</td></tr>
<tr><td> 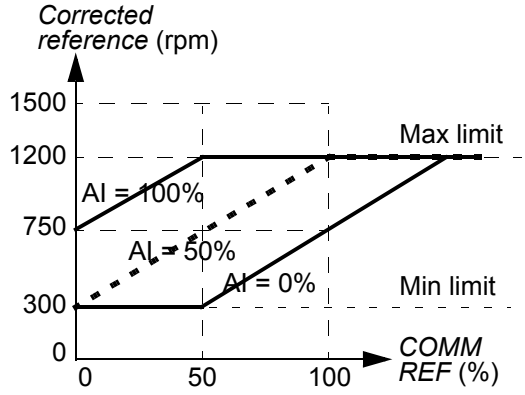
</td><td> 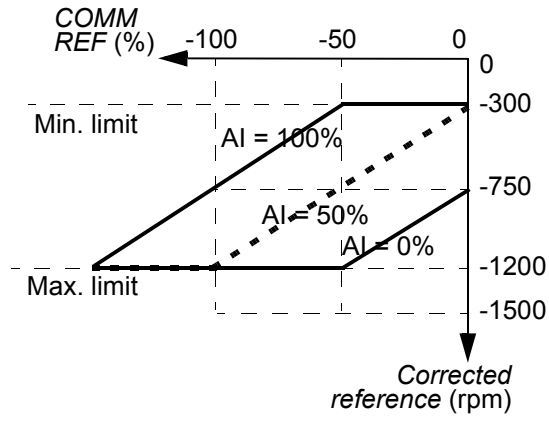
</td></tr>
<tr><td colspan="2">Maximum limit is defined by parameter *1105 REF1 MAX* / *1108 REF2 MAX*.
Minimum limit is defined by parameter *1104 REF1 MIN* / *1107 REF2 MIN*.</td></tr>
</table>

<table>
<tr><th>Setting</th><th>When COMM ≥ 0</th><th>When COMM ≤ 0</th></tr>
<tr><td>COMM *AI1</td><td>COMM(%) · (AI(%) / 50%) · (MAX-MIN) + MIN</td><td>COMM(%) · (AI(%) / 50%) · (MAX-MIN) - MIN</td></tr>
<tr><td></td><td> 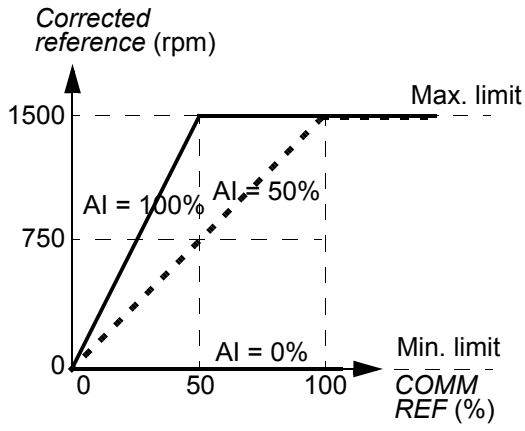
</td><td> 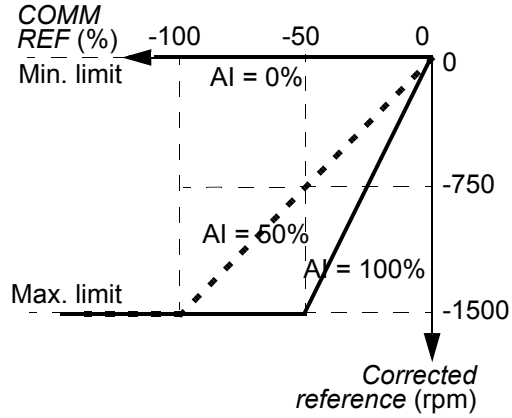
</td></tr>
<tr><td></td><td> 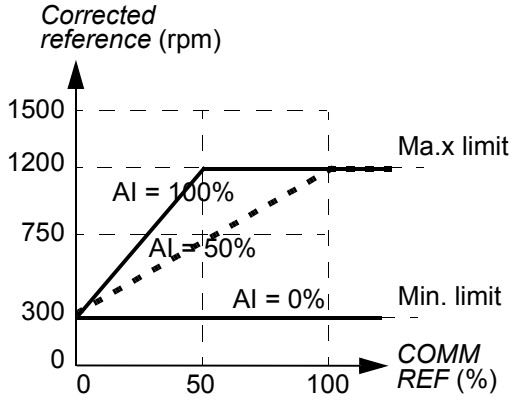
</td><td> 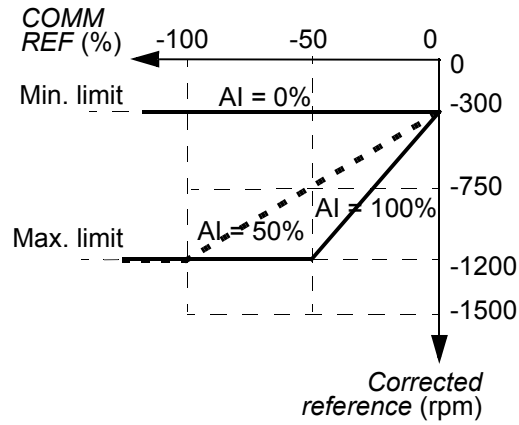
</td></tr>
<tr><td></td><td colspan="2">Maximum limit is defined by parameter 1105 REF1 MAX / 1108 REF2 MAX.
Minimum limit is defined by parameter 1104 REF1 MIN / 1107 REF2 MIN.</td></tr>
</table>

Fieldbus reference scaling

Fieldbus references REF1 and REF2 are scaled for the ABB drives profile as shown in the following table.

Note: Any correction of the reference (see section *Reference selection and correction* on page *310*) is applied before scaling.

Reference	Range	Reference type	Scaling	Remarks
REF1	-32767 … +32767	Speed or frequency	-20000 = -**(par. *1105*)** 0 = 0 +20000 = **(par. *1105*)** (20000 corresponds to 100%)	Final reference limited by *1104*/*1105*. Actual motor speed limited by *2001*/*2002* (speed) or *2007*/*2008* (frequency).
REF2	-32767 … +32767	Speed or frequency	-10000 = -**(par. *1108*)** 0 = 0 +10000 = **(par. *1108*)** (10000 corresponds to 100%)	Final reference limited by *1107*/*1108*. Actual motor speed limited by *2001*/*2002* (speed) or *2007*/*2008* (frequency).
		Torque	-10000 = -**(par. *1108*)** 0 = 0 +10000 = **(par. *1108*)** (10000 corresponds to 100%)	Final reference limited by *2015*/*2017* (torque 1) or *2016*/*2018* (torque 2).
		PID reference	-10000 = -**(par. *1108*)** 0 = 0 +10000 = **(par. *1108*)** (10000 corresponds to 100%)	Final reference limited by *4012*/*4013* (PID set 1) or *4112*/*4113* (PID set 2).

Note: The settings of parameters *1104 REF1 MIN* and *1107 REF2 MIN* have no effect on the reference scaling.

Reference handling

The control of rotation direction is configured for each control location (EXT1 and EXT2) using the parameters in group *10 START/STOP/DIR*. Fieldbus references are bipolar, ie they can be negative or positive. The following diagrams illustrate how group 10 parameters and the sign of the fieldbus reference interact to produce the reference REF1/REF2.

	Direction determined by the sign of COMM	**Direction determined by digital command, eg digital input, control panel**
Par. *1003 DIRECTION* = *FORWARD*	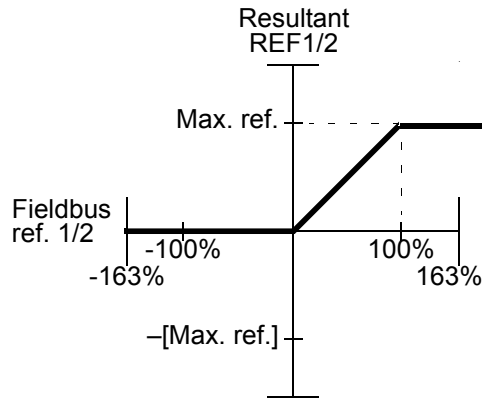	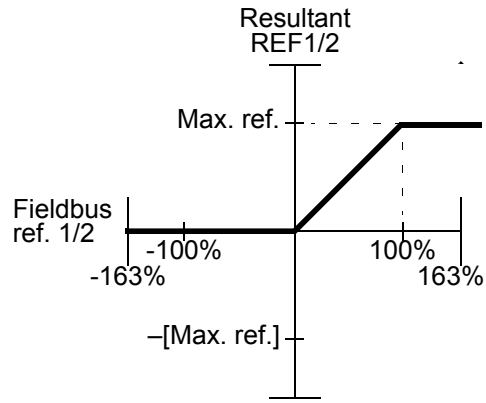
Par. *1003 DIRECTION* = *REVERSE*	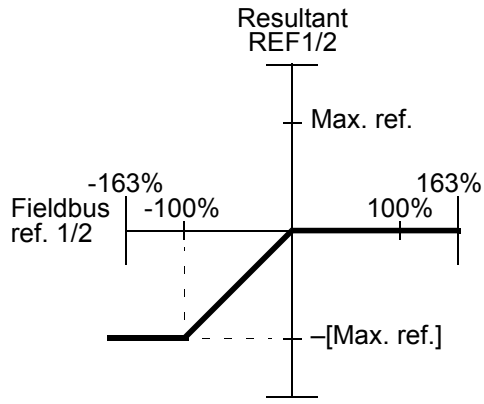	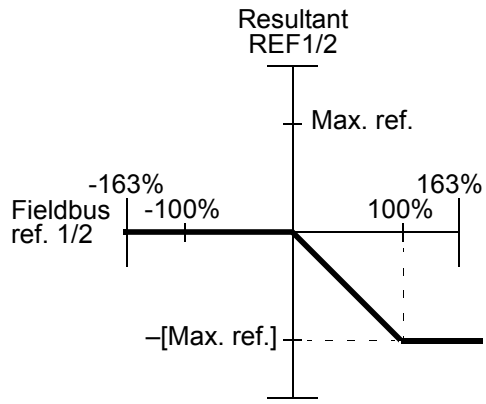
Par. *1003 DIRECTION* = *REQUEST*	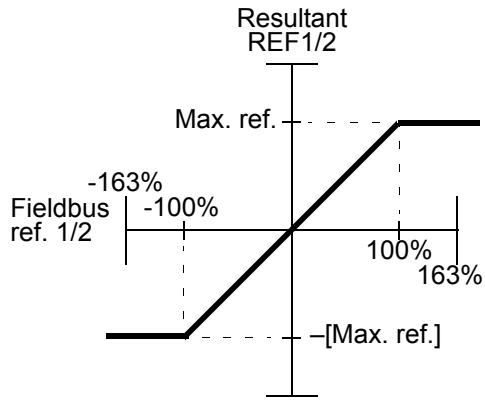	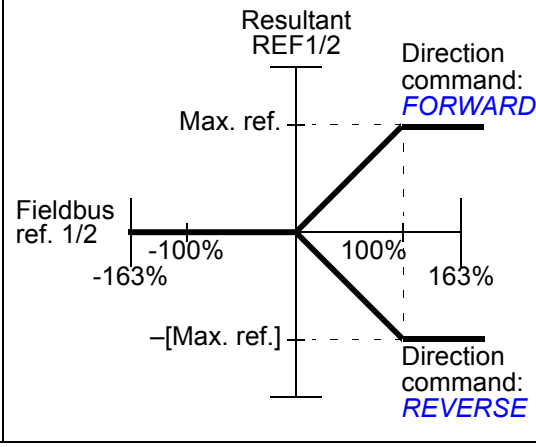

Actual value scaling

The scaling of the integers sent to the master as Actual values depends on the selected function. See chapter *Actual signals and parameters* on page *175*.

Modbus mapping

The following Modbus function codes are supported by the drive.

Function	Code hex (dec)	Additional information
Read Multiple Holding Registers	03 (03)	Reads the contents of registers in a slave device. Parameter sets, control, status and reference values are mapped as holding registers.
Write Single Holding Register	06 (06)	Writes to a single register in a slave device. Parameter sets, control, status and reference values are mapped as holding registers.
Diagnostics	08 (08)	Provides a series of tests for checking the communication between the master and the slave devices, or for checking various internal error conditions within the slave. The following subcodes are supported: 00 Return Query Data: The data passed in the request data field is to be returned in the response. The entire response message should be identical to the request. 01 Restart Communications Option: The slave device serial line port must be initialized and restarted, and all of its communication event counters cleared. If the port is currently in Listen Only Mode, no response is returned. If the port is not currently in Listen Only Mode, a normal response is returned before the restart. 04 Force Listen Only Mode: Forces the addressed slave device to Listen Only Mode. This isolates it from the other devices on the network, allowing them to continue communicating without interruption from the addressed remote device. No response is returned. The only function that will be processed after this mode is entered is the Restart Communications Option function (subcode 01).
Write Multiple Holding Registers	10 (16)	Writes to the registers (1 to approximately 120 registers) in a slave device. Parameter sets, control, status and reference values are mapped as holding registers.
Read/Write Multiple Holding Registers	17 (23)	Performs a combination of one read operation and one write operation (function codes 03 and 10) in a single Modbus transaction. The write operation is performed before the read operation.

Register mapping

The drive parameters, Control/Status word, references and actual values are mapped to the area 4xxxx so that:

- 40001…40099 are reserved for drive control/status, reference and actual values.
- 40101…49999 are reserved for drive parameters *0101*…9999 (eg 40102 is parameter *0102*). In this mapping, the thousands and hundreds correspond to the

group number, while the tens and ones correspond to the parameter number within a group.

The register addresses that do not correspond with drive parameters are invalid. If there is an attempt to read or write invalid addresses, the Modbus interface returns an exception code to the controller. See *Exception codes* on page *314*.

The following table gives information on the contents of the Modbus addresses 40001…40012 and 40031…40034.

Modbus register		Access	Information
40001	Control word	R/W	Control word. Supported only by the ABB drives profile, ie when *5305 EFB CTRL PROFILE* setting is *ABB DRV LIM* or *ABB DRV FULL*. Parameter *5319 EFB PAR 19* shows a copy of the Control word in hexadecimal format.
40002	Reference 1	R/W	External reference REF1. See section *Fieldbus references* on page *308*.
40003	Reference 2	R/W	External reference REF2. See section *Fieldbus references* on page *308*.
40004	Status word	R	Status word. Supported only by the ABB drives profile, ie when *5305 EFB CTRL PROFILE* setting is *ABB DRV LIM* or *ABB DRV FULL*. Parameter *5320 EFB PAR 20* shows a copy of the Control word in hexadecimal format.
40005 … 40012	Actual 1…8	R	Actual value 1…8. Use parameter *5310*… *5317* to select an actual value to be mapped to Modbus register 40005…40012.
40031	Control word LSW	R/W	*0301 FB CMD WORD 1*, ie the least significant word of the DCU profile 32-bit Control word. Supported only by the DCU profile, ie when *5305 EFB CTRL PROFILE* setting is *DCU PROFILE*.
40032	Control word MSW	R/W	*0302 FB CMD WORD 2*, ie the most significant word of the DCU profile 32-bit Control word. Supported only by the DCU profile, ie when *5305 EFB CTRL PROFILE* setting is *DCU PROFILE*.
40033	Status word LSW	R	*0303 FB STS WORD 1*, ie the least significant word of the DCU profile 32-bit Status word. Supported only by the DCU profile, ie when *5305 EFB CTRL PROFILE* setting is *DCU PROFILE*.
40034	ACS355 Status word MSW	R	*0304 FB STS WORD 2*, ie the most significant word of the DCU profile 32-bit Status word. Supported only by the DCU profile, ie when *5305 EFB CTRL PROFILE* setting is *DCU PROFILE*.

Note: Parameter writes through standard Modbus are always volatile, ie modified values are not automatically stored to the permanent memory. Use parameter *1607 PARAM SAVE* to save all changed values.

Function codes

Supported function codes for the holding 4xxxx register:

Code hex (dec)	Function name	Additional information
03 (03)	Read 4X Register	Reads the binary contents of registers (4X references) in a slave device.
06 (06)	Preset single 4X register	Presets a value into a single register (4X reference). When broadcast, the function presets the same register reference in all attached slaves.
10 (16)	Preset multiple 4X registers	Presets values into a sequence of registers (4X references). When broadcast, the function presets the same register references in all attached slaves.
17 (23)	Read/Write 4X registers	Performs a combination of one read operation and one write operation (function codes 03 and 10) in a single Modbus transaction. Write operation is performed before the read operation.

Note: In the Modbus data message, register 4xxxx is addressed as xxxx -1. For example register 40002 is addressed as 0001.

Exception codes

Exception codes are serial communication responses from the drive. The drive supports the standard Modbus exception codes listed in the following table.

Code	Name	Description
01	Illegal Function	Unsupported command
02	Illegal Data Address	Address does not exist or is read/write protected.
03	Illegal Data Value	Incorrect value for the drive: • Value is outside minimum or maximum limits. • Parameter is read-only. • Message is too long. • Parameter write is not allowed when start is active. • Parameter write is not allowed when factory macro is selected.

Drive parameter *5318 EFB PAR 18* holds the most recent exception code.

Communication profiles

The embedded fieldbus supports three communication profiles:

- DCU communication profile (*DCU PROFILE*)
- ABB drives limited communication profile (*ABB DRV LIM*)
- ABB drives full communication profile (*ABB DRV FULL*).

The DCU profile extends the control and status interface to 32 bits, and it is the internal interface between the main drive application and the embedded fieldbus environment. The ABB drives limited profile is based on the PROFIBUS interface. The ABB drives full profile (*ABB DRV FULL*) supports two Control word bits not supported by the *ABB DRV LIM* implementation.

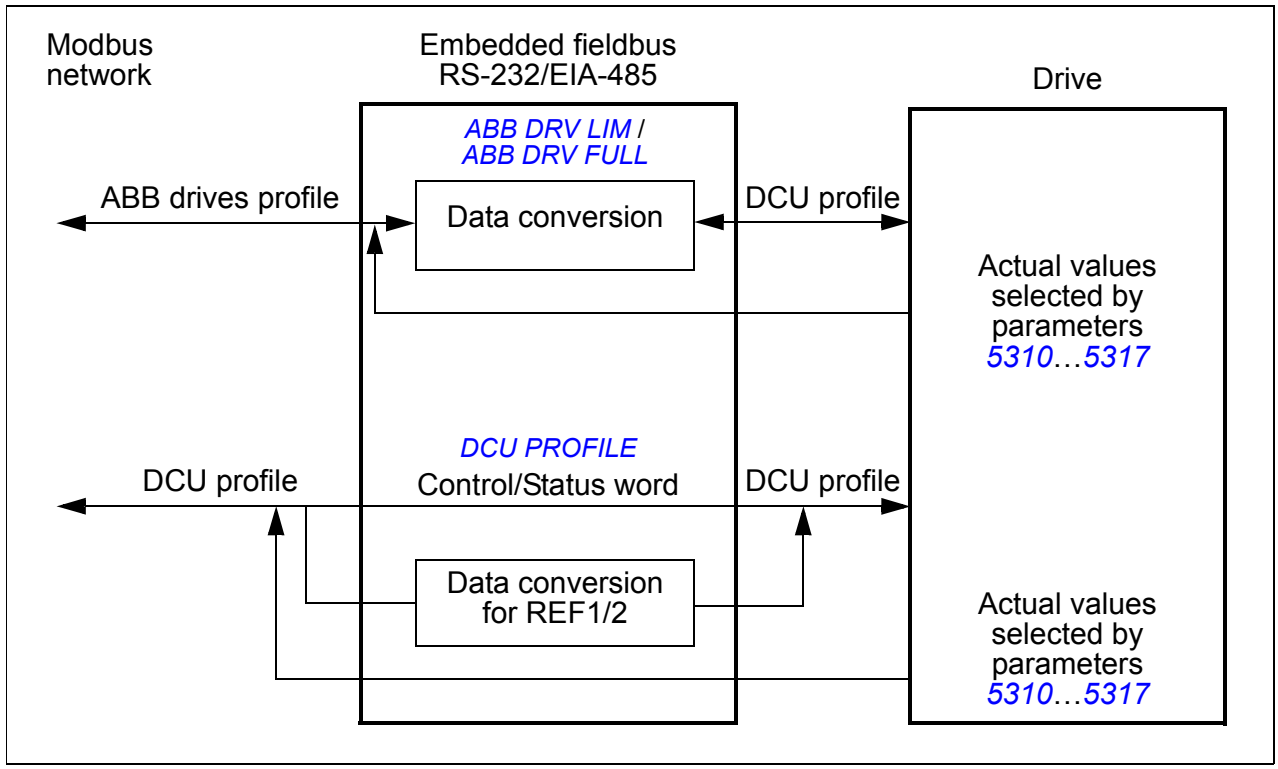

ABB drives communication profile

Two implementations of the ABB drives communication profile are available: ABB drives full and ABB drives limited. The ABB drives communication profile is active when parameter *5305 EFB CTRL PROFILE* is set to *ABB DRV FULL* or *ABB DRV LIM*. The Control word and Status word for the profile are described below.

The ABB drives communication profiles can be used through both EXT1 and EXT2. The Control word commands are in effect when parameter *1001 EXT1 COMMANDS* or *1002 EXT2 COMMANDS* (whichever control location is active) is set to *COMM*.

Control word

The table below and the state diagram on page *319* describe the Control word content for the ABB drives profile. The upper case boldface text refers to the states shown in the diagram.

ABB drives profile Control word, parameter *5319 EFB PAR 19*			
Bit	**Name**	**Value**	**Comments**
0	OFF1 CONTROL	1	Enter **READY TO OPERATE.**
		0	Stop along currently active deceleration ramp (*2203*/*2206*). Enter OFF1 ACTIVE; proceed to READY TO SWITCH ON unless other interlocks (OFF2, OFF3) are active.
1	OFF2 CONTROL	1	Continue operation (OFF2 inactive).
		0	Emergency OFF, drive coast to stop. Enter **OFF2 ACTIVE**; proceed to **SWITCH-ON INHIBITED**.
2	OFF3 CONTROL	1	Continue operation (OFF3 inactive).
		0	Emergency stop, drive stops within time defined by par. *2208*. Enter **OFF3 ACTIVE**; proceed to **SWITCH-ON INHIBITED**. **WARNING!** Ensure motor and driven machine can be stopped using this stop mode.
3	INHIBIT OPERATION	1	Enter OPERATION ENABLED. (**Note:** The Run enable signal must be active; see parameter *1601*. If par. *1601* is set to *COMM*, this bit also activates the Run enable signal.)
		0	Inhibit operation. Enter **OPERATION INHIBITED**.
4	**Note:** Bit 4 is supported only by *ABB DRV FULL* profile.		
	RAMP_OUT_ ZERO (*ABB DRV FULL*)	1	Enter **RAMP FUNCTION GENERATOR: OUTPUT ENABLED**.
		0	Force Ramp function generator output to zero. Drive ramps to stop (current and DC voltage limits in force).
5	RAMP_HOLD	1	Enable ramp function. Enter **RAMP FUNCTION GENERATOR: ACCELERATOR ENABLED**.
		0	Halt ramping (Ramp function generator output held).
6	RAMP_IN_ ZERO	1	Normal operation. Enter **OPERATING**.
		0	Force Ramp function generator input to zero.
7	RESET	0=>1	Fault reset if an active fault exists. Enter **SWITCH-ON INHIBITED**. Effective if par. *1604* is set to *COMM*.
		0	Continue normal operation.
8… 9	Not in use		

ABB drives profile Control word, parameter *5319 EFB PAR 19*			
Bit	**Name**	**Value**	**Comments**
10	**Note:** Bit 10 is supported only by *ABB DRV FULL*.		
	REMOTE_CMD (*ABB DRV FULL*)	1	Fieldbus control enabled.
		0	Control word ≠ 0 or reference ≠ 0: Retain last Control word and reference. Control word = 0 and reference = 0: Fieldbus control enabled. Reference and deceleration/acceleration ramp are locked.
11	EXT CTRL LOC	1	Select external control location EXT2. Effective if par. *1102* is set to *COMM*.
		0	Select external control location EXT1. Effective if par. *1102* is set to *COMM*.
12…15	Reserved		

Status word

The table below and the state diagram on page *319* describe the Status word content for the ABB drives profile. The upper case boldface text refers to the states shown in the diagram.

ABB drives profile (EFB) Status word, parameter *5320 EFB PAR 20*			
Bit	**Name**	**Value**	**STATE/Description (Correspond to states/boxes in the state diagram)**
0	RDY_ON	1	**READY TO SWITCH ON**
		0	**NOT READY TO SWITCH ON**
1	RDY_RUN	1	**READY TO OPERATE**
		0	**OFF1 ACTIVE**
2	RDY_REF	1	**OPERATION ENABLED**
		0	**OPERATION INHIBITED**
3	TRIPPED	0…1	**FAULT**. See chapter *Fault tracing* on page *335*.
		0	No fault
4	OFF_2_STA	1	OFF2 inactive
		0	**OFF2 ACTIVE**
5	OFF_3_STA	1	OFF3 inactive
		0	**OFF3 ACTIVE**
6	SWC_ON_INHIB	1	**SWITCH-ON INHIBITED**
		0	Switch-on inhibit not active
7	ALARM	1	Alarm. See chapter *Fault tracing* on page *335*.
		0	No alarm

ABB drives profile (EFB) Status word, parameter *5320 EFB PAR 20*			
Bit	**Name**	**Value**	**STATE/Description (Correspond to states/boxes in the state diagram)**
8	AT_SETPOINT	1	**OPERATING**. Actual value equals reference value (= is within tolerance limits, ie in speed control the difference between the output speed and the speed reference is less than or equal to 4/1%* of the nominal motor speed). * Asymmetric hysteresis: 4% when speed enters the reference area, 1% when speed exits the reference area.
		0	Actual value differs from reference value (= is outside tolerance limits).
9	REMOTE	1	Drive control location: REMOTE (EXT1 or EXT2)
		0	Drive control location: LOCAL
10	ABOVE_LIMIT	1	Supervised parameter value exceeds the supervision high limit. Bit value is 1 until the supervised parameter value falls below the supervision low limit. See parameter group *32 SUPERVISION*.
		0	Supervised parameter value falls below the supervision low limit. Bit value is 0 until the supervised parameter value exceeds the supervision high limit. See parameter group *32 SUPERVISION*.
11	EXT CTRL LOC	1	External control location EXT2 selected
		0	External control location EXT1 selected
12	EXT RUN ENABLE	1	External Run enable signal received
		0	No external Run enable received
13… 15	Reserved		

State diagram

The state diagram below describes the start-stop function of Control word (CW) and Status word (SW) bits for the ABB drives profile.

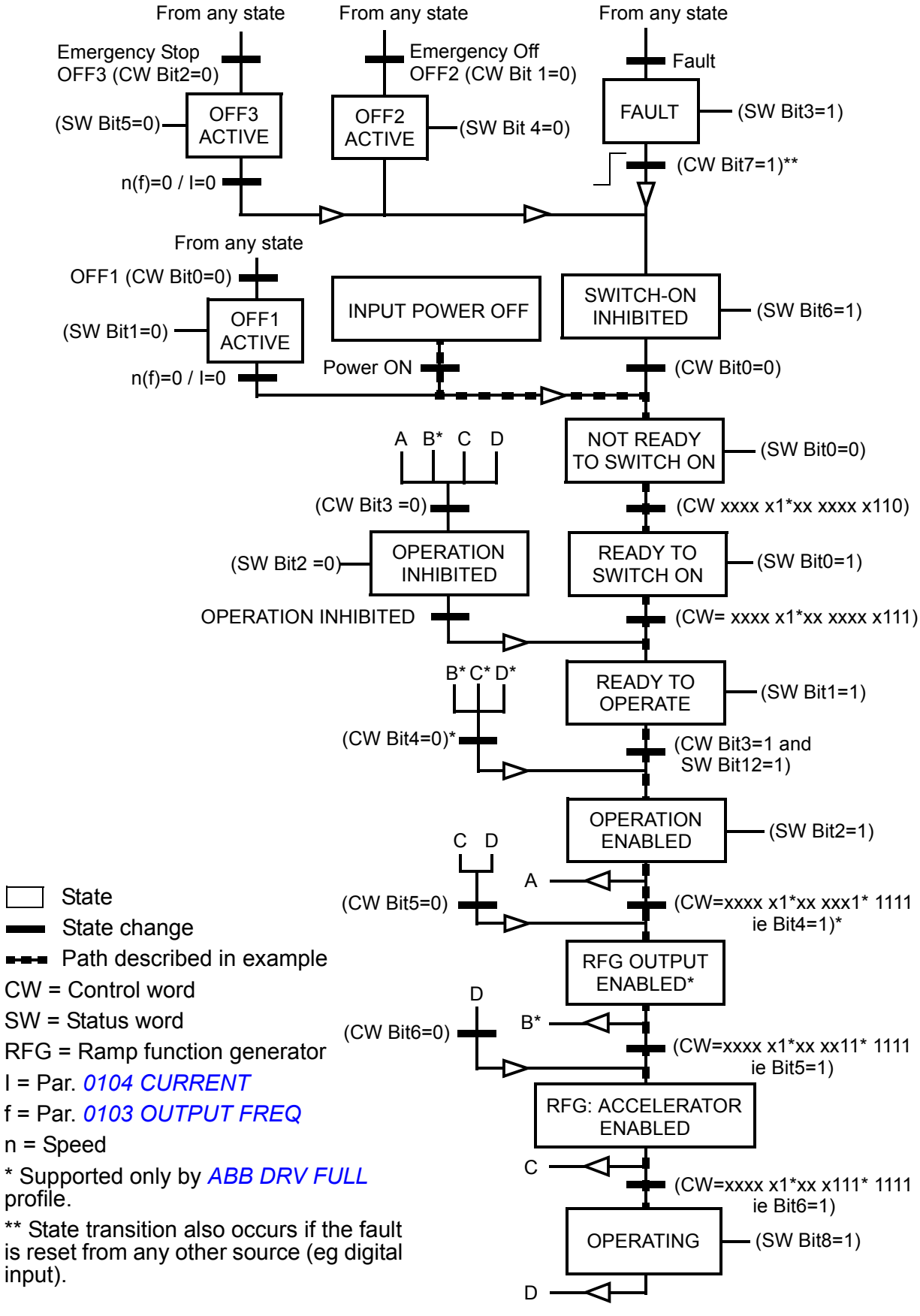

DCU communication profile

Because the DCU profile extends the control and status interface to 32 bits, two different signals are needed for both the control words (*0301* and *0302*) and status words (*0303* and *0304*).

Control words

The following tables describe the Control word content for the DCU profile.

DCU profile Control word, parameter *0301 FB CMD WORD 1*			
Bit	**Name**	**Value**	**Information**
0	STOP	1	Stop according to either the stop mode parameter (*2102*) or the stop mode requests (bits 7 and 8). **Note:** Simultaneous STOP and START commands result in a stop command.
		0	No operation
1	START	1	Start **Note:** Simultaneous STOP and START commands result in a stop command.
		0	No operation
2	REVERSE	1	Reverse direction. The direction is defined by using the XOR operation on bit 2 and 31 (= sign of the reference) values.
		0	Forward direction
3	LOCAL	1	Enter local control mode.
		0	Enter external control mode.
4	RESET	-> 1	Reset.
		other	No operation
5	EXT2	1	Switch to external control EXT2.
		0	Switch to external control EXT1.
6	RUN_DISABLE	1	Activate Run disable.
		0	Activate Run enable.
7	STPMODE_R	1	Stop along currently active deceleration ramp (bit 10). Bit 0 value must be 1 (*STOP*).
		0	No operation
8	STPMODE_EM	1	Emergency stop. Bit 0 value must be 1 (*STOP*).
		0	No operation
9	STPMODE_C	1	Coast to stop. Bit 0 value must be 1 (*STOP*).
		0	No operation
10	RAMP_2	1	Use acceleration/deceleration ramp pair 2 (defined by parameters *2205*…*2207*).
		0	Use acceleration/deceleration ramp pair 1 (defined by parameters *2202*…*2204*).
11	RAMP_OUT_0	1	Force ramp output to zero.
		0	No operation

DCU profile Control word, parameter *0301 FB CMD WORD 1*			
Bit	**Name**	**Value**	**Information**
12	RAMP_HOLD	1	Halt ramping (Ramp function generator output held).
		0	No operation
13	RAMP_IN_0	1	Force ramp input to zero.
		0	No operation
14	REQ_LOCALLOC	1	Enable local lock. Entering the local control mode is disabled (LOC/REM key of the panel).
		0	No operation
15	TORQLIM2	1	Use minimum/maximum torque limit 2 (defined by parameters *2016* and *2018*).
		0	Use minimum/maximum torque limit 1 (defined by parameters *2015* and *2017*).

DCU profile Control word, parameter *0302 FB CMD WORD 2*			
Bit	**Name**	**Value**	**Information**
16	FBLOCAL_CTL	1	Fieldbus local mode for Control word requested. **Example:** If the drive is in remote control and the start/stop/direction command source is DI for external control location 1 (EXT1): by setting bit 16 to value 1, the start/stop/direction is controlled by the fieldbus command word.
		0	No fieldbus local mode
17	FBLOCAL_REF	1	Fieldbus local mode Control word for reference requested. See the example for bit 16 (*FBLOCAL_CTL*).
		0	No fieldbus local mode
18	START_DISABLE1	1	No Start enable
		0	Enable start. Effective if parameter *1608* setting is *COMM*.
19	START_DISABLE2	1	No Start enable
		0	Enable start. Effective if parameter *1609* setting is *COMM*.
21	JOGGING 1	1	Activate jogging 1. Effective if parameter *1010* setting is *COMM*. See section *Jogging* on page *161*.
		0	Jogging 1 disabled
20	JOGGING 2	1	Activate jogging 2. Effective if parameter *1010* setting is *COMM*. See section *Jogging* on page *161*.
		0	Jogging 2 disabled
22…26	Reserved		
27	REF_CONST	1	Constant speed reference request. This is an internal control bit. Only for supervision.
		0	No operation

DCU profile Control word, parameter *0302 FB CMD WORD 2*			
Bit	**Name**	**Value**	**Information**
28	REF_AVE	1	Average speed reference request. This is an internal control bit. Only for supervision.
		0	No operation
29	LINK_ON	1	Master detected on fieldbus link. This is an internal control bit. Only for supervision.
		0	Fieldbus link is down.
30	REQ_STARTINH	1	Start inhibit
		0	No start inhibit
31	Reserved		

Status words

The following tables describe the Status word content for the DCU profile.

DCU profile Status word, parameter *0303 FB STS WORD 1*			
Bit	**Name**	**Value**	**Status**
0	READY	1	Drive is ready to receive start command.
		0	Drive is not ready.
1	ENABLED	1	External Run enable signal received.
		0	No external Run enable signal received.
2	STARTED	1	Drive has received start command.
		0	Drive has not received start command.
3	RUNNING	1	Drive is modulating.
		0	Drive is not modulating.
4	ZERO_SPEED	1	Drive is at zero speed.
		0	Drive has not reached zero speed.
5	ACCELERATE	1	Drive is accelerating.
		0	Drive is not accelerating.
6	DECELERATE	1	Drive is decelerating.
		0	Drive is not decelerating.
7	AT_SETPOINT	1	Drive is at setpoint. Actual value equals reference value (ie is within tolerance limits).
		0	Drive has not reached setpoint.
8	LIMIT	1	Operation is limited by group *20 LIMITS* settings.
		0	Operation is within group *20 LIMITS* settings.
9	SUPERVISION	1	A supervised parameter (group *32 SUPERVISION*) is outside its limits.
		0	All supervised parameters are within limits.
10	REV_REF	1	Drive reference is in reverse direction.
		0	Drive reference is in forward direction.
11	REV_ACT	1	Drive is running in reverse direction.
		0	Drive is running in forward direction.

DCU profile Status word, parameter *0303 FB STS WORD 1*			
Bit	**Name**	**Value**	**Status**
12	PANEL_LOCAL	1	Control is in control panel (or PC tool) local mode.
		0	Control is not in control panel local mode.
13	FIELDBUS_LOCAL	1	Control is in fieldbus local mode
		0	Control is not in fieldbus local mode.
14	EXT2_ACT	1	Control is in EXT2 mode.
		0	Control is in EXT1 mode.
15	FAULT	1	Drive is in a fault state.
		0	Drive is not in a fault state.

DCU profile Status word, parameter *0304 FB STS WORD 2*			
Bit	**Name**	**Value**	**Status**
16	ALARM	1	An alarm is on.
		0	No alarms are on.
17	NOTICE	1	A maintenance request is pending.
		0	No maintenance request
18	DIRLOCK	1	Direction lock is ON. (Direction change is locked.)
		0	Direction lock is OFF.
19	LOCALLOCK	1	Local mode lock is ON. (Local mode is locked.)
		0	Local mode lock is OFF.
20	CTL_MODE	1	Drive is in vector control mode.
		0	Drive is in scalar control mode.
21	JOGGING ACTIVE	1	Jogging function is active.
		0	Jogging function is not active.
22… 25	Reserved		
26	REQ_CTL	1	Control word requested from fieldbus
		0	No operation
27	REQ_REF1	1	Reference 1 requested from fieldbus
		0	Reference 1 is not requested from fieldbus.
28	REQ_REF2	1	Reference 2 requested from fieldbus
		0	Reference 2 is not requested from fieldbus.
29	REQ_REF2EXT	1	External PID reference 2 requested from fieldbus
		0	External PID reference 2 is not requested from fieldbus.
30	ACK_STARTINH	1	Start inhibit from fieldbus
		0	No start inhibit from fieldbus
31	Reserved		

14

Fieldbus control with fieldbus adapter

What this chapter contains

The chapter describes how the drive can be controlled by external devices over a communication network through fieldbus adapter.

System overview

The drive can be connected to an external control system through a fieldbus adapter or embedded fieldbus. For embedded fieldbus control, see chapter *Fieldbus control with embedded fieldbus* on page *301*.

Fieldbus adapter is connected to drive terminal X3.

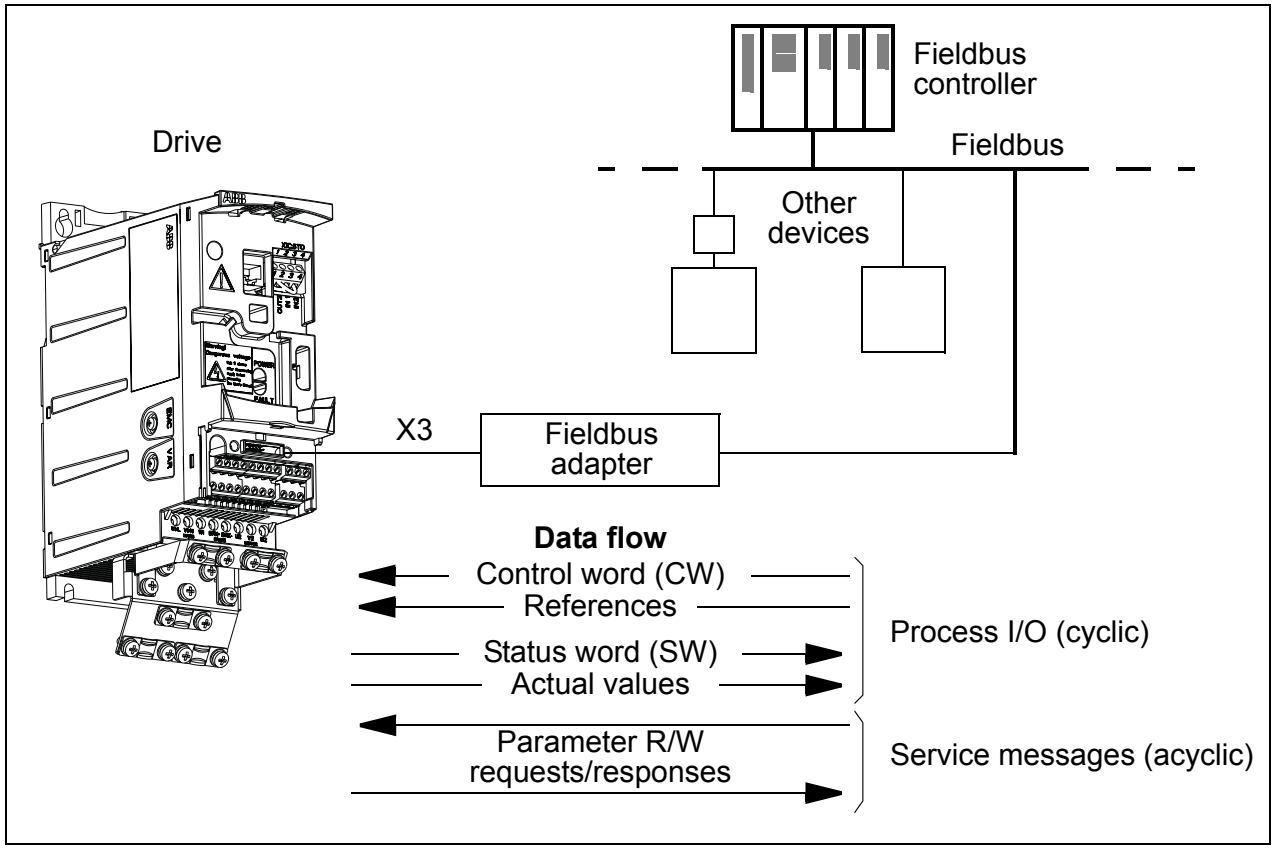

The drive can be set to receive all of its control information through the fieldbus interface, or the control can be distributed between the fieldbus interface and other available sources, eg digital and analog inputs.

The drive can communicate to a control system through a fieldbus adapter using eg the following serial communication protocols. Other protocols may be available; contact your local ABB representative.

- PROFIBUS-DP (FPBA-01 adapter)
- CANopen (FCAN-01 adapter)
- DeviceNet™ (FDNA-01 adapter)
- Ethernet (FENA-01 adapter)
- Modbus RTU (FMBA-01 adapter. See chapter *Fieldbus control with embedded fieldbus* on page *301*.)

The drive detects automatically which fieldbus adapter is connected to drive terminal X3 (with the exception of FMBA-01). The DCU profile is always used in communication between the drive and the fieldbus adapter (see section *Fieldbus control interface* on page *330*). The communication profile on the fieldbus network depends on the type and settings of the connected adapter.

The default profile settings are protocol dependent (eg vendor-specific profile (ABB drives) for PROFIBUS and industry-standard drive profile (AC/DC Drive) for DeviceNet).

Setting up communication through a fieldbus adapter module

Before configuring the drive for fieldbus control, the adapter module must be mechanically and electrically installed according to the instructions given in section *Attach the optional fieldbus module* on page *35*, and the module manual.

The communication between the drive and the fieldbus adapter module is activated by setting parameter *9802 COMM PROT SEL* to *EXT FBA*. The adapter-specific parameters in group *51 EXT COMM MODULE* must also be set. See the table below.

Parameter	Alternative settings	Setting for fieldbus control	Function/Information
COMMUNICATION INITIALIZATION			
9802 COMM PROT SEL	*NOT SEL* *STD MODBUS* *EXT FBA* *MODBUS RS232*	*EXT FBA*	Initializes the communication between the drive and the fieldbus adapter module.
ADAPTER MODULE CONFIGURATION			
5101 FBA TYPE	-	-	Displays the type of the fieldbus adapter module.
5102 FB PAR 2	These parameters are adapter module-specific. For more information, see the module manual. Note that not all of these parameters are necessarily used.		
… …			
5126 FB PAR 26			
5127 FBA PAR REFRESH	(0) *DONE* (1) *REFRESH*	-	Validates any changed adapter module configuration parameter settings.
Note: In adapter module, the parameter group number is A (group 1) for group *51 EXT COMM MODULE*.			
TRANSMITTED DATA SELECTION			
5401 FBA DATA IN 1 … … *5410 FBA DATA OUT 10*	0 1…6 101…9999		Defines the data transmitted from the drive to the fieldbus controller.
5501 FBA DATA OUT 1 … … *5510 FBA DATA OUT 10*	0 1…6 101…9999		Defines the data transmitted from the fieldbus controller to the drive.
Note: In adapter module, the parameter group number is C (group 3) for group *54 FBA DATA IN* and B (group 2) for group *55 FBA DATA OUT*.			

After the module configuration parameters in groups *51 EXT COMM MODULE*, *54 FBA DATA IN* and *55 FBA DATA OUT* have been set, the drive control parameters (shown in section *Drive control parameters* on page *328*) must be checked and adjusted when necessary.

The new settings will take effect when the drive is next powered up, or when parameter *5127 FBA PAR REFRESH* is activated.

Drive control parameters

After the fieldbus communication has been set up, the drive control parameters listed in the table below should be checked and adjusted where necessary.

The **Setting for fieldbus control** column gives the value to use when the fieldbus interface is the desired source or destination for that particular signal. The **Function/Information** column gives a description of the parameter.

Parameter	Setting for fieldbus control	Function/Information
CONTROL COMMAND SOURCE SELECTION		
1001 EXT1 COMMANDS	*COMM*	Selects the fieldbus as the source for the start and stop commands when EXT1 is selected as the active control location.
1002 EXT2 COMMANDS	*COMM*	Selects the fieldbus as the source for the start and stop commands when EXT2 is selected as the active control location.
1003 DIRECTION	*FORWARD* *REVERSE* *REQUEST*	Enables the rotation direction control as defined by parameters *1001* and *1002*. The direction control is explained in section *Reference handling* on page *311*.
1010 JOGGING SEL	*COMM*	Enables jogging 1 or 2 activation through the fieldbus.
1102 EXT1/EXT2 SEL	*COMM*	Enables EXT1/EXT2 selection through the fieldbus.
1103 REF1 SELECT	*COMM* *COMM+AI1* *COMM*AI1*	Fieldbus reference REF1 is used when EXT1 is selected as the active control location. See section *Reference selection and correction* on page *332*.
1106 REF2 SELECT	*COMM* *COMM+AI1* *COMM*AI1*	Fieldbus reference REF2 is used when EXT2 is selected as the active control location. See section *Reference selection and correction* on page *332*.
OUTPUT SIGNAL SOURCE SELECTION		
1401 RELAY OUTPUT 1	*COMM* *COMM(-1)*	Enables relay output RO control by signal *0134 COMM RO WORD*.
1501 AO1 CONTENT SEL	135 (ie *0135 COMM VALUE 1*)	Directs the contents of fieldbus reference *0135 COMM VALUE 1* to analog output AO.
SYSTEM CONTROL INPUTS		
1601 RUN ENABLE	*COMM*	Selects the fieldbus interface as the source for the inverted Run enable signal (Run disable).

Parameter	Setting for fieldbus control	Function/Information
1604 FAULT RESET SEL	*COMM*	Selects the fieldbus interface as the source for the fault reset signal.
1606 LOCAL LOCK	*COMM*	Selects the fieldbus interface as the source for the local lock signal.
1607 PARAM SAVE	*DONE* *SAVE…*	Saves parameter value changes (including those made through fieldbus control) to the permanent memory.
1608 START ENABLE 1	*COMM*	Selects the fieldbus interface as the source for the inverted Start enable 1 (Start disable) signal.
1609 START ENABLE 2	*COMM*	Selects the fieldbus interface as the source for the inverted Start enable 2 (Start disable) signal.
LIMITS		
2013 MIN TORQUE SEL	*COMM*	Selects the fieldbus interface as the source for the minimum torque limit 1/2 selection.
2014 MAX TORQUE SEL	*COMM*	Selects the fieldbus interface as the source for the maximum torque limit 1/2 selection.
2201 ACC/DEC 1/2 SEL	*COMM*	Selects the fieldbus interface as the source for acceleration/deceleration ramp pair 1/2 selection
2209 RAMP INPUT 0	*COMM*	Selects the fieldbus interface as the source for forcing ramp input to zero.
COMMUNICATION FAULT FUNCTIONS		
3018 COMM FAULT FUNC	*NOT SEL* *FAULT* *CONST SP 7* *LAST SPEED*	Determines the drive action in case the fieldbus communication is lost.
3019 COMM FAULT TIME	0.1 … 60.0 s	Defines the time between the communication loss detection and the action selected with parameter *3018 COMM FAULT FUNC*.
PID CONTROLLER REFERENCE SIGNAL SOURCE SELECTION		
4010/ *4110*/ *4210 SET POINT SEL*	*COMM* *COMM+AI1* *COMM*AI1*	PID control reference (REF2)

Fieldbus control interface

The communication between a fieldbus system and the drive consists of 16-bit input and output data words. The drive supports at the maximum the use of 10 data words in each direction.

Data transformed from the drive to the fieldbus controller is defined by parameter group *54 FBA DATA IN* and data transformed from the fieldbus controller to the drive is defined by parameter group *55 FBA DATA OUT*.

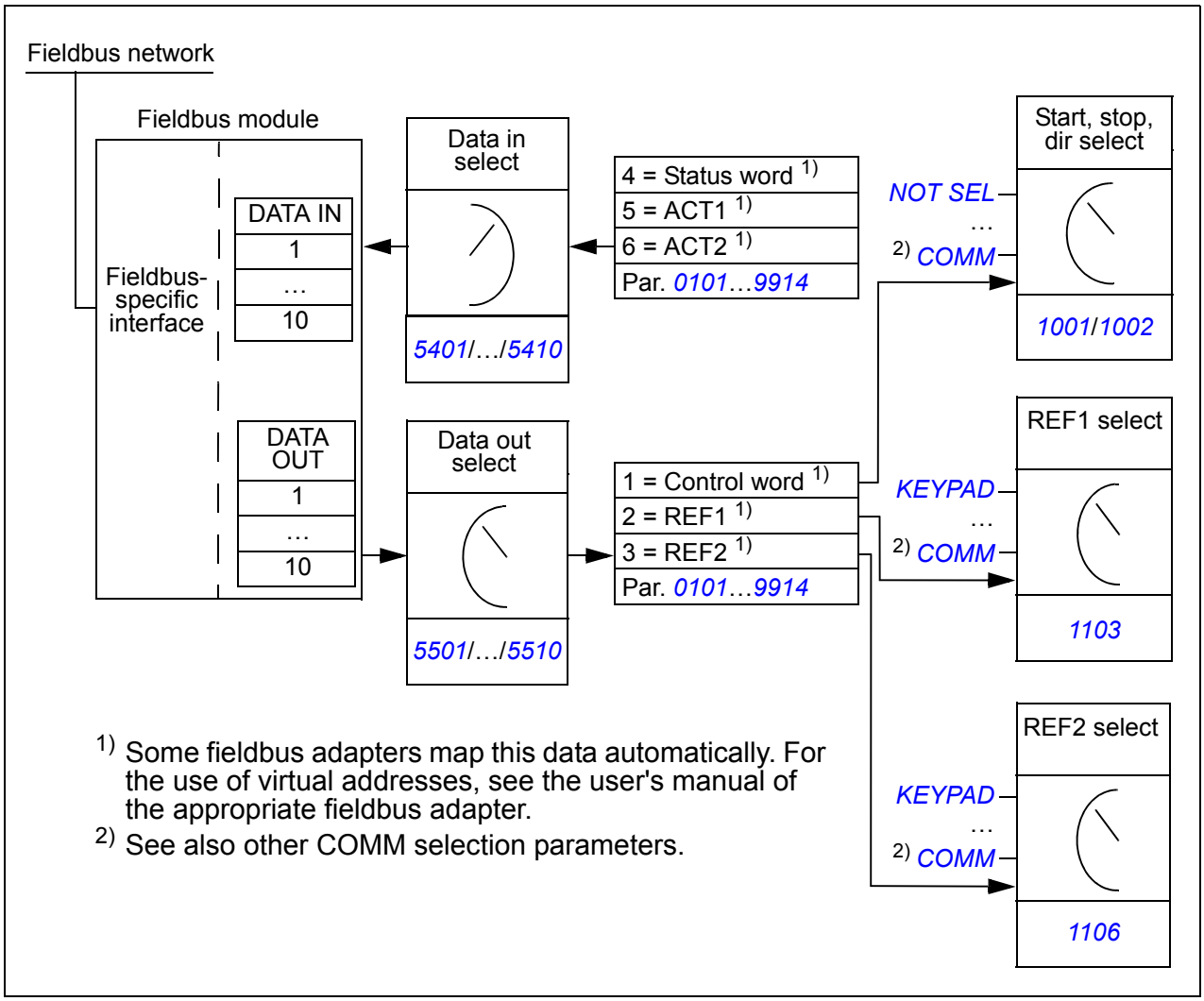

Control word and Status word

The Control word (CW) is the principal means of controlling the drive from a fieldbus system. The Control word is sent by the fieldbus controller to the drive. The drive switches between its states according to the bit-coded instructions of the Control word.

The Status word (SW) is a word containing status information, sent by the drive to the fieldbus controller.

References

References (REF) are 16-bit signed integers. A negative reference (indicating reversed direction of rotation) is formed by calculating the two's complement from the corresponding positive reference value. The contents of each reference word can be used as speed or frequency reference.

Actual values

Actual values (ACT) are 16-bit words containing information on selected operations of the drive.

Communication profile

The communication between the drive and the fieldbus adapter supports the DCU communication profile. The DCU profile extends the control and status interface to 32 bits.

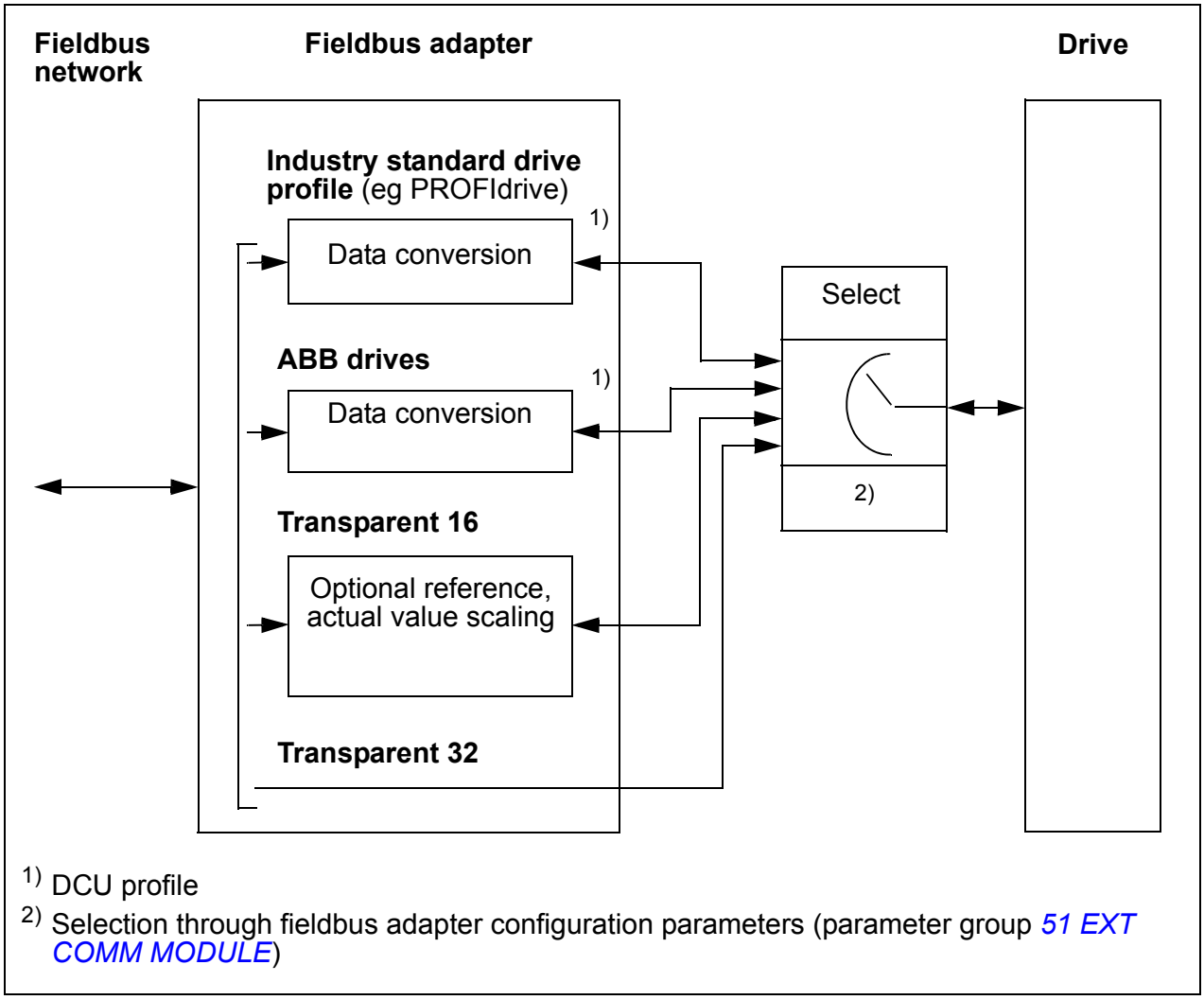

1) DCU profile
2) Selection through fieldbus adapter configuration parameters (parameter group *51 EXT COMM MODULE*)

For the DCU profile Control and Status word contents, see section *DCU communication profile* on page *320*.

Fieldbus references

Reference selection and correction

Fieldbus reference (called COMM in signal selection contexts) is selected by setting a reference selection parameter – *1103 REF1 SELECT* or *1106 REF2 SELECT* – to *COMM*, *COMM+AI1* or *COMM*AI1*. When parameter *1103* or *1106* is set to *COMM*, the fieldbus reference is forwarded as such without correction. When parameter *1103* or *1106* is set to *COMM+AI1* or *COMM*AI1*, the fieldbus reference is corrected using analog input AI1 as shown in the following examples for the DCU profile.

With the DCU profile the fieldbus reference type can be Hz, rpm or percent. In the following examples the reference is in rpm.

<table>
<tr><th>Setting</th><th>When COMM ≥ 0 rpm</th><th>When COMM ≤ 0 rpm</th></tr>
<tr><td rowspan="4">COMM +AI1</td><td>COMM/1000 + (AI(%) - 50%) · (MAX-MIN)</td><td>COMM/1000 + (AI(%) - 50%) · (MAX-MIN)</td></tr>
<tr><td> 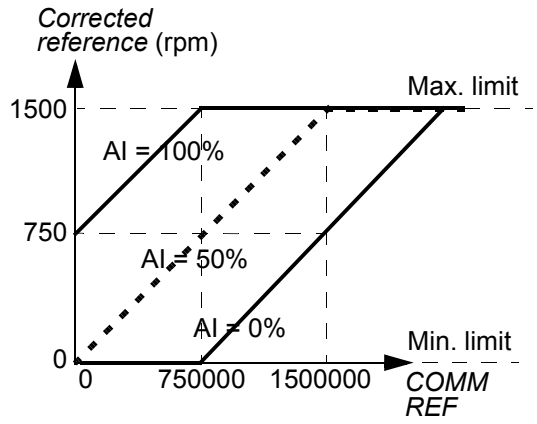
</td><td> 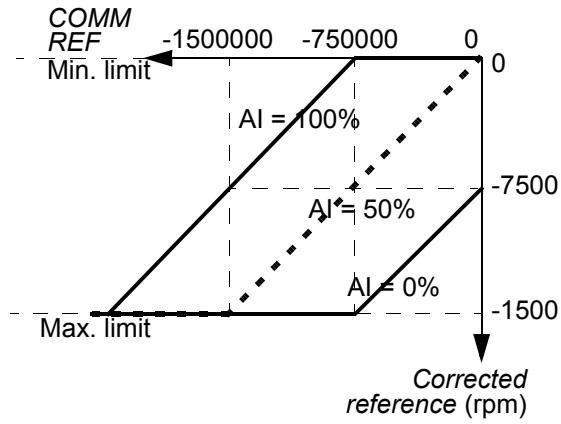
</td></tr>
<tr><td> 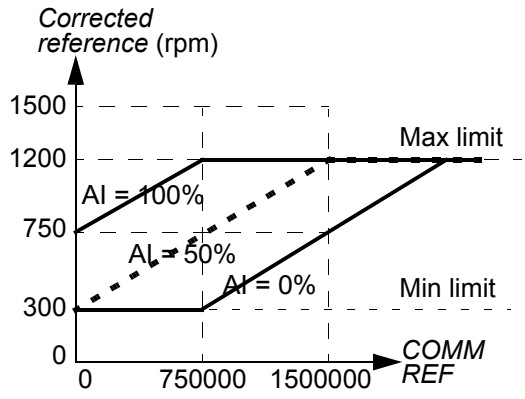
</td><td> 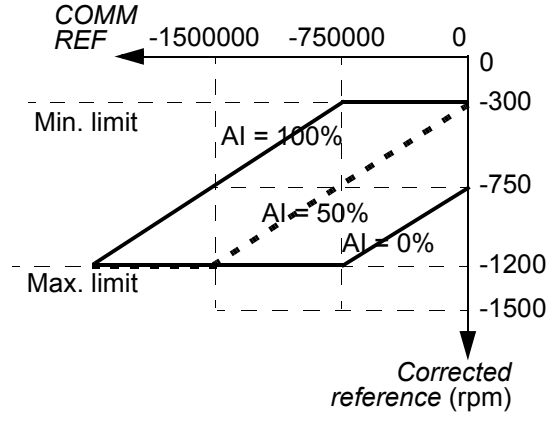
</td></tr>
<tr><td colspan="2">Maximum limit is defined by parameter *1105 REF1 MAX* / *1108 REF2 MAX*.
Minimum limit is defined by parameter *1104 REF1 MIN* / *1107 REF2 MIN*.</td></tr>
</table>

<table>
<tr><th>Setting</th><th>When COMM ≥ 0 rpm</th><th>When COMM ≤ 0 rpm</th></tr>
<tr><td rowspan="4">COMM
*AI1</td><td>(COMM/1000) · (AI(%) / 50%)</td><td>(COMM/1000) · (AI(%) / 50%)</td></tr>
<tr><td> 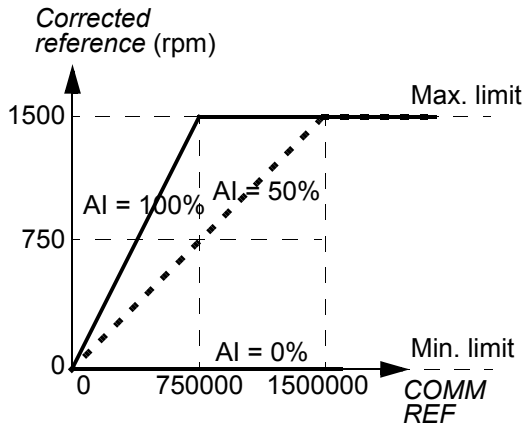
</td><td> 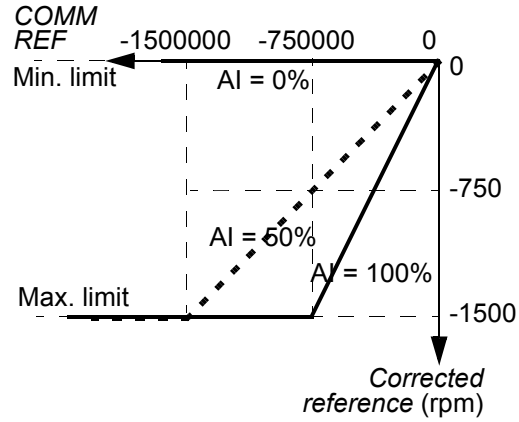
</td></tr>
<tr><td> 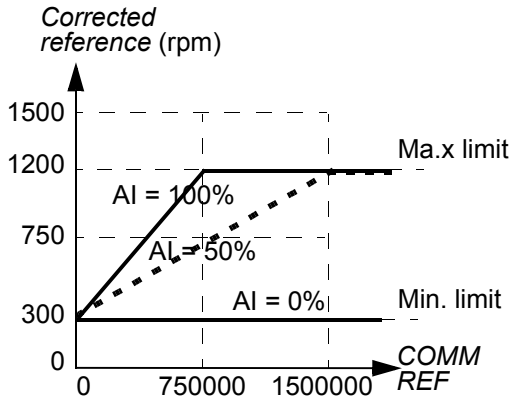
</td><td> 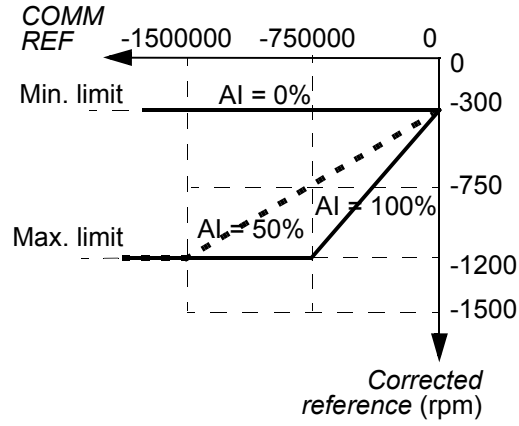
</td></tr>
<tr><td colspan="2">Maximum limit is defined by parameter 1105 REF1 MAX / 1108 REF2 MAX.
Minimum limit is defined by parameter 1104 REF1 MIN / 1107 REF2 MIN.</td></tr>
</table>

Fieldbus reference scaling

Fieldbus references REF1 and REF2 are scaled for the DCU profile as shown in the following table.

Note: Any correction of the reference (see section *Reference selection and correction* on page *332*) is applied before scaling.

Reference	Range	Reference type	Scaling	Remarks
REF1	-214783648 … +214783647	Speed or frequency	1000 = 1 rpm / 1 Hz	Final reference limited by *1104*/*1105*. Actual motor speed limited by *2001*/*2002* (speed) or *2007*/*2008* (frequency).
REF2	-214783648 … +214783647	Speed or frequency	1000 = 1%	Final reference limited by *1107*/*1108*. Actual motor speed limited by *2001*/*2002* (speed) or *2007*/*2008* (frequency).
		Torque	1000 = 1%	Final reference limited by *2015*/*2017* (torque 1) or *2016*/*2018* (torque 2).
		PID reference	1000 = 1%	Final reference limited by *4012*/*4013* (PID set 1) or *4112*/*4113* (PID set 2).

Note: The settings of parameters *1104 REF1 MIN* and *1107 REF2 MIN* have no effect on the reference scaling.

Reference handling

Reference handling is the same for the ABB drives profile (embedded fieldbus) and DCU profile. See section *Reference handling* on page *311*.

Actual value scaling

The scaling of the integers sent to the master as Actual values depends on the selected function. See chapter *Actual signals and parameters* on page *175*.

15

Fault tracing

What this chapter contains

The chapter tells how to reset faults and view fault history. It also lists all alarm and fault messages including the possible cause and corrective actions.

Safety

WARNING! Only qualified electricians are allowed to maintain the drive. Read the safety instructions in chapter *Safety* on page *17* before you work on the drive.

Alarm and fault indications

Fault is indicated with a red LED. See section *LEDs* on page *356*.

An alarm or fault message on the panel display indicates abnormal drive status. Using the information given in this chapter, most alarm and fault causes can be identified and corrected. If not, contact an ABB representative.

The four digit code number in parenthesis after the fault is for the fieldbus communication. See chapters *Fieldbus control with embedded fieldbus* on page *301* and *Fieldbus control with fieldbus adapter* on page *325*.

How to reset

The drive can be reset either by pressing the keypad key RESET EXIT (basic control panel) or RESET (assistant control panel), through digital input or fieldbus, or by switching the supply voltage off for a while. The source for the fault reset signal is selected by

parameter *1604 FAULT RESET SEL*. When the fault has been removed, the motor can be restarted.

Fault history

When a fault is detected, it is stored in the fault history. The latest faults are stored together with the time stamp.

Parameters *0401 LAST FAULT*, *0412 PREVIOUS FAULT 1* and *0413 PREVIOUS FAULT 2* store the most recent faults. Parameters *0404*…*0409* show drive operation data at the time the latest fault occurred. The assistant control panel provides additional information about the fault history. See section *Fault logger mode* on page *101* for more information.

Alarm messages generated by the drive

CODE	ALARM	CAUSE	WHAT TO DO
2001	OVERCURRENT *0308* bit 0 (programmable fault function *1610*)	Output current limit controller is active.	Check motor load. Check acceleration time (*2202* and *2205*). Check motor and motor cable (including phasing). Check ambient conditions. Load capacity decreases if installation site ambient temperature exceeds 40 °C. See section *Derating* on page *359*.
2002	OVERVOLTAGE *0308* bit 1 (programmable fault function *1610*)	DC overvoltage controller is active.	Check deceleration time (*2203* and *2206*). Check input power line for static or transient overvoltage.
2003	UNDERVOLTAGE *0308* bit 2 (programmable fault function *1610*)	DC undervoltage controller is active.	Check input power supply.
2004	DIR LOCK *0308* bit 3	Change of direction is not allowed.	Check parameter *1003 DIRECTION* settings.
2005	IO COMM *0308* bit 4 (programmable fault function *3018*, *3019*)	Fieldbus communication break	Check status of fieldbus communication. See chapter *Fieldbus control with embedded fieldbus* on page *301*, chapter *Fieldbus control with fieldbus adapter* on page *325* or appropriate fieldbus adapter manual. Check fault function parameter settings. Check connections. Check if master can communicate.
2006	AI1 LOSS *0308* bit 5 (programmable fault function *3001*, *3021*)	Analog input AI1 signal has fallen below limit defined by parameter *3021 AI1 FAULT LIMIT*.	Check fault function parameter settings. Check for proper analog control signal levels. Check connections.
2007	AI2 LOSS *0308* bit 6 (programmable fault function *3001*, *3022*)	Analog input AI2 signal has fallen below limit defined by parameter *3022 AI2 FAULT LIMIT*.	Check fault function parameter settings. Check for proper analog control signal levels. Check connections.

CODE	ALARM	CAUSE	WHAT TO DO
2008	PANEL LOSS *0308* bit 7 (programmable fault function *3002*)	Control panel selected as active control location for drive has ceased communicating.	Check panel connection. Check fault function parameters. Check control panel connector. Refit control panel in mounting platform. If drive is in external control mode (REM) and is set to accept start/stop, direction commands or references through control panel: Check group *10 START/STOP/DIR* and *11 REFERENCE SELECT* settings.
2009	DEVICE OVERTEMP *0308* bit 8	Drive IGBT temperature is excessive. Alarm limit is 120 °C.	Check ambient conditions. See also section *Derating* on page *359*. Check air flow and fan operation. Check motor power against drive power.
2010	MOTOR TEMP *0308* bit 9 (programmable fault function *3005*…*3009* / *3503*)	Motor temperature is too high (or appears to be too high) due to excessive load, insufficient motor power, inadequate cooling or incorrect start-up data.	Check motor ratings, load and cooling. Check start-up data. Check fault function parameters.
		Measured motor temperature has exceeded alarm limit set by parameter *3503 ALARM LIMIT*.	Check value of alarm limit. Check that actual number of sensors corresponds to value set by parameter *3501 SENSOR TYPE*. Let motor cool down. Ensure proper motor cooling: Check cooling fan, clean cooling surfaces, etc.
2011	UNDERLOAD *0308* bit 10 (programmable fault function *3013*…*3015*)	Motor load is too low due to eg release mechanism in driven equipment.	Check for problem in driven equipment. Check fault function parameters. Check motor power against drive power.
2012	MOTOR STALL *0308* bit 11 (programmable fault function *3010*…*3012*)	Motor is operating in stall region due to eg excessive load or insufficient motor power.	Check motor load and drive ratings. Check fault function parameters.
2013 [1)]	AUTORESET *0308* bit 12	Automatic reset alarm	Check parameter group *31 AUTOMATIC RESET* settings.
2018 [1)]	PID SLEEP *0309* bit 1	Sleep function has entered sleeping mode.	See parameter groups *40 PROCESS PID SET 1*… *41 PROCESS PID SET 2*.
2019	ID RUN *0309* bit 2	Motor Identification run is on.	This alarm belongs to normal start-up procedure. Wait until drive indicates that motor identification is completed.

CODE	ALARM	CAUSE	WHAT TO DO
2021	START ENABLE 1 MISSING *0309* bit 4	No Start enable 1 signal received	Check parameter *1608 START ENABLE 1* settings. Check digital input connections. Check fieldbus communication settings.
2022	START ENABLE 2 MISSING *0309* bit 5	No Start enable 2 signal received	Check parameter *1609 START ENABLE 2* settings. Check digital input connections. Check fieldbus communication settings.
2023	EMERGENCY STOP *0309* bit 6	Drive has received emergency stop command and ramps to stop according to ramp time defined by parameter *2208 EMERG DEC TIME*.	Check that it is safe to continue operation. Return emergency stop push button to normal position.
2024	ENCODER ERROR *0309* bit 7 (programmable fault function *5003*)	Communication fault between pulse encoder and pulse encoder interface module or between module and drive.	Check pulse encoder and its wiring, pulse encoder interface module and its wiring and parameter group *50 ENCODER* settings.
2025	FIRST START *0309* bit 8	Motor identification magnetization is on. This alarm belongs to normal start-up procedure.	Wait until drive indicates that motor identification is completed.
2026	INPUT PHASE LOSS *0309* bit 9 (programmable fault function *3016*)	Intermediate circuit DC voltage is oscillating due to missing input power line phase or blown fuse. Alarm is generated when DC voltage ripple exceeds 14% of nominal DC voltage.	Check input power line fuses. Check for input power supply imbalance. Check fault function parameters.
2029	MOTOR BACK EMF *0309* bit 12	Permanent magnet motor is rotating, start mode 2 (*DC MAGN*) is selected with parameter *2101 START FUNCTION*, and run is requested. Drive warns that rotating motor cannot be magnetized with DC current.	If start to rotating motor is required, select start mode 1 (*AUTO*) with parameter *2101 START FUNCTION*. Otherwise drive starts after motor has stopped.

CODE	ALARM	CAUSE	WHAT TO DO
2035	SAFE TORQUE OFF *0309* bit 13	STO (Safe torque off) requested and it functions correctly. Parameter *3025 STO OPERATION* is set to react with alarm.	If this was not expected reaction to safety circuit interruption, check cabling of safety circuit connected to STO terminals X1C. If different reaction is required, change value of parameter *3025 STO OPERATION*. **Note:** Start signal must be reset (toggled to 0) if STO has been used while drive has been running.

[1] Even when the relay output is configured to indicate alarm conditions (eg parameter *1401 RELAY OUTPUT 1* = 5 (*ALARM*) or 16 (*FLT/ALARM*)), this alarm is not indicated by a relay output.

Alarms generated by the basic control panel

The basic control panel indicates control panel alarms with a code, A5xxx.

ALARM CODE	CAUSE	WHAT TO DO
5001	Drive is not responding.	Check panel connection.
5002	Incompatible communication profile	Contact your local ABB representative.
5010	Corrupted panel parameter backup file	Retry parameter upload. Retry parameter download.
5011	Drive is controlled from another source.	Change drive control to local control mode.
5012	Direction of rotation is locked.	Enable change of direction. See parameter *1003 DIRECTION*.
5013	Panel control is disabled because start inhibit is active.	Start from panel is not possible. Reset emergency stop command or remove 3-wire stop command before starting from panel. See section *3-wire macro* on page *113* and parameters *1001 EXT1 COMMANDS*, *1002 EXT2 COMMANDS* and *2109 EMERG STOP SEL*.
5014	Panel control is disabled because of drive fault.	Reset drive fault and retry.
5015	Panel control is disabled because local control mode lock is active.	Deactivate local control mode lock and retry. See parameter *1606 LOCAL LOCK*.
5018	Parameter default value is not found.	Contact your local ABB representative.
5019	Writing non-zero parameter value is prohibited.	Only parameter reset is allowed.
5020	Parameter or parameter group does not exist or parameter value is inconsistent.	Contact your local ABB representative.
5021	Parameter or parameter group is hidden.	Contact your local ABB representative.
5022	Parameter is write protected.	Parameter value is read-only and cannot be changed.
5023	Parameter change is not allowed when drive is running.	Stop drive and change parameter value.
5024	Drive is executing a task.	Wait until task is completed.
5025	Software is being uploaded or downloaded.	Wait until upload/download is complete.
5026	Value is at or below minimum limit.	Contact your local ABB representative.
5027	Value is at or above maximum limit.	Contact your local ABB representative.
5028	Invalid value	Contact your local ABB representative.

ALARM CODE	CAUSE	WHAT TO DO
5029	Memory is not ready.	Retry.
5030	Invalid request	Contact your local ABB representative.
5031	Drive is not ready for operation, eg due to low DC voltage.	Check input power supply.
5032	Parameter error	Contact your local ABB representative.
5040	Parameter download error. Selected parameter set is not in current parameter backup file.	Perform upload function before download.
5041	Parameter backup file does not fit into memory.	Contact your local ABB representative.
5042	Parameter download error. Selected parameter set is not in current parameter backup file.	Perform upload function before download.
5043	No start inhibit	
5044	Parameter backup file restoring error	Check that file is compatible with drive.
5050	Parameter upload aborted	Retry parameter upload.
5051	File error	Contact your local ABB representative.
5052	Parameter upload has failed.	Retry parameter upload.
5060	Parameter download aborted	Retry parameter download.
5062	Parameter download has failed.	Retry parameter download.
5070	Panel backup memory write error	Contact your local ABB representative.
5071	Panel backup memory read error	Contact your local ABB representative.
5080	Operation is not allowed because drive is not in local control mode.	Switch to local control mode.
5081	Operation is not allowed because of active fault.	Check cause of fault and reset fault.
5083	Operation is not allowed because parameter lock is on.	Check parameter *1602 PARAMETER LOCK* setting.
5084	Operation is not allowed because drive is performing a task.	Wait until task is completed and retry.
5085	Parameter download from source to destination drive has failed.	Check that source and destination drive types are same, ie ACS355. See type designation label of the drive.
5086	Parameter download from source to destination drive has failed.	Check that source and destination drive type designations are the same. See type designation labels of the drives.

ALARM CODE	CAUSE	WHAT TO DO
5087	Parameter download from source to destination drive has failed because parameter sets are incompatible.	Check that source and destination drive information are same. See parameters in group *33 INFORMATION*.
5088	Operation has failed because of drive memory error.	Contact your local ABB representative.
5089	Download has failed because of CRC error.	Contact your local ABB representative.
5090	Download has failed because of data processing error.	Contact your local ABB representative.
5091	Operation has failed because of parameter error.	Contact your local ABB representative.
5092	Parameter download from source to destination drive has failed because parameter sets are incompatible.	Check that source and destination drive information are same. See parameters in group *33 INFORMATION*.

Fault messages generated by the drive

CODE	FAULT	CAUSE	WHAT TO DO
0001	OVERCURRENT (2310) *0305* bit 0	Output current has exceeded trip level.	Check motor load. Check acceleration time (*2202* and *2205*). Check motor and motor cable (including phasing). Check ambient conditions. Load capacity decreases if installation site ambient temperature exceeds 40 °C. See section *Derating* on page *359*.
0002	DC OVERVOLT (3210) *0305* bit 1	Excessive intermediate circuit DC voltage. DC overvoltage trip limit is 420 V for 200 V drives and 840 V for 400 V drives.	Check that overvoltage controller is on (parameter *2005 OVERVOLT CTRL*). Check input power line for static or transient overvoltage. Check brake chopper and resistor (if used). DC overvoltage control must be deactivated when brake chopper and resistor is used. Check deceleration time (*2203*, *2206*). Retrofit frequency converter with brake chopper and brake resistor.
0003	DEV OVERTEMP (4210) *0305* bit 2	Drive IGBT temperature is excessive. Fault trip limit is 135 °C.	Check ambient conditions. See also section *Derating* on page *359*. Check air flow and fan operation. Check motor power against drive power.
0004	SHORT CIRC (2340) *0305* bit 3	Short circuit in motor cable(s) or motor	Check motor and motor cable.
0006	DC UNDERVOLT (3220) *0305* bit 5	Intermediate circuit DC voltage is not sufficient due to missing input power line phase, blown fuse, rectifier bridge internal fault or too low input power.	Check that undervoltage controller is on (parameter *2006 UNDERVOLT CTRL*). Check input power supply and fuses.
0007	AI1 LOSS (8110) *0305* bit 6 (programmable fault function *3001*, *3021*)	Analog input AI1 signal has fallen below limit defined by parameter *3021 AI1 FAULT LIMIT*.	Check fault function parameter settings. Check for proper analog control signal levels. Check connections.
0008	AI2 LOSS (8110) *0305* bit 7 (programmable fault function *3001*, *3022*)	Analog input AI2 signal has fallen below limit defined by parameter *3022 AI2 FAULT LIMIT*.	Check fault function parameter settings. Check for proper analog control signal levels. Check connections.

CODE	FAULT	CAUSE	WHAT TO DO
0009	MOT OVERTEMP (4310) *0305* bit 8 (programmable fault function *3005*…*3009* / *3504*)	Motor temperature is too high (or appears to be too high) due to excessive load, insufficient motor power, inadequate cooling or incorrect start-up data.	Check motor ratings, load and cooling. Check start-up data. Check fault function parameters.
		Measured motor temperature has exceeded fault limit set by parameter *3504 FAULT LIMIT*.	Check value of fault limit. Check that actual number of sensors corresponds to value set by parameter *3501 SENSOR TYPE*. Let motor cool down. Ensure proper motor cooling: Check cooling fan, clean cooling surfaces, etc.
0010	PANEL LOSS (5300) *0305* bit 9 (programmable fault function *3002*)	Control panel selected as active control location for drive has ceased communicating.	Check panel connection. Check fault function parameters. Check control panel connector. Refit control panel in mounting platform. If drive is in external control mode (REM) and is set to accept start/stop, direction commands or references through control panel: Check group *10 START/STOP/DIR* and *11 REFERENCE SELECT* settings.
0011	ID RUN FAIL (FF84) *0305* bit 10	Motor ID run is not completed successfully.	Check motor connection. Check start-up data (group *99 START-UP DATA*). Check maximum speed (parameter *2002*). It should be at least 80% of motor nominal speed (parameter *9908*). Ensure ID run has been performed according to instructions in section *How to perform the ID run* on page *69*.
0012	MOTOR STALL (7121) *0305* bit 11 (programmable fault function *3010*…*3012*)	Motor is operating in stall region due to eg excessive load or insufficient motor power.	Check motor load and drive ratings. Check fault function parameters.
0014	EXT FAULT 1 (9000) *0305* bit 13 (programmable fault function *3003*)	External fault 1	Check external devices for faults. Check parameter *3003 EXTERNAL FAULT 1* setting.

CODE	FAULT	CAUSE	WHAT TO DO
0015	EXT FAULT 2 (9001) *0305* bit 14 (programmable fault function *3004*)	External fault 2	Check external devices for faults. Check parameter *3004 EXTERNAL FAULT 2* setting.
0016	EARTH FAULT (2330) *0305* bit 15 (programmable fault function *3017*)	Drive has detected earth (ground) fault in motor or motor cable.	Check motor. Check motor cable. Motor cable length must not exceed maximum specifications. See section *Motor connection data* on page *367*. **Note:** Disabling earth fault (ground fault) may damage drive.
0017	UNDERLOAD (FF6A) *0306* bit 0 (programmable fault function *3013*…*3015*)	Motor load is too low due to eg release mechanism in driven equipment.	Check for problem in driven equipment. Check fault function parameters. Check motor power against drive power.
0018	THERM FAIL (5210) *0306* bit 1	Drive internal fault. Thermistor used for drive internal temperature measurement is open or short-circuited.	Contact your local ABB representative.
0021	CURR MEAS (2211) *0306* bit 4	Drive internal fault. Current measurement is out of range.	Contact your local ABB representative.
0022	SUPPLY PHASE (3130) *0306* bit 5 (programmable fault function *3016*)	Intermediate circuit DC voltage is oscillating due to missing input power line phase or blown fuse. Trip occurs when DC voltage ripple exceeds 14% of nominal DC voltage.	Check input power line fuses. Check for input power supply imbalance. Check fault function parameters.
0023	ENCODER ERR (7301) *0306* bit 6 (programmable fault function *5003*)	Communication fault between pulse encoder and pulse encoder interface module or between module and drive.	Check pulse encoder and its wiring, pulse encoder interface module and its wiring and parameter group *50 ENCODER* settings.

CODE	FAULT	CAUSE	WHAT TO DO
0024	OVERSPEED (7310) *0306* bit 7	Motor is turning faster than highest allowed speed due to incorrectly set minimum/maximum speed, insufficient braking torque or changes in load when using torque reference. Operating range limits are set by parameters *2001 MINIMUM SPEED* and *2002 MAXIMUM SPEED* (in vector control) or *2007 MINIMUM FREQ* and *2008 MAXIMUM FREQ* (in scalar control).	Check minimum/maximum frequency settings. Check adequacy of motor braking torque. Check applicability of torque control. Check need for brake chopper and resistor(s).
0027	CONFIG FILE (630F) *0306* bit 10	Internal configuration file error	Contact your local ABB representative.
0028	SERIAL 1 ERR (7510) *0306* bit 11 (programmable fault function *3018*, *3019*)	Fieldbus communication break	Check status of fieldbus communication. See chapter *Fieldbus control with embedded fieldbus* on page *301*, chapter *Fieldbus control with fieldbus adapter* on page *325* or appropriate fieldbus adapter manual. Check fault function parameter settings. Check connections. Check if master can communicate.
0029	EFB CON FILE (6306) *0306* bit 12	Configuration file reading error	Contact your local ABB representative.
0030	FORCE TRIP (FF90) *0306* bit 13	Trip command received from fieldbus	See appropriate communication module manual.
0034	MOTOR PHASE (FF56) *0306* bit 14	Motor circuit fault due to missing motor phase or motor thermistor relay (used in motor temperature measurement) fault.	Check motor and motor cable. Check motor thermistor relay (if used).

CODE	FAULT	CAUSE	WHAT TO DO
0035	OUTP WIRING (FF95) *0306* bit 15 (programmable fault function *3023*)	Incorrect input power and motor cable connection (ie input power cable is connected to drive motor connection). Fault can be erroneously declared if drive is faulty or input power is delta grounded system and motor cable capacitance is large.	Check input power connections.
0036	INCOMPATIBLE SW (630F) *0307* bit 3	Loaded software is not compatible.	Contact your local ABB representative.
0037	CB OVERTEMP (4110) *0305* bit 12	Drive control board overheated. Fault trip limit is 95 °C.	Check for excessive ambient temperature. Check for fan failure. Check for obstructions in air flow. Check the dimensioning and cooling of cabinet.
0044	SAFE TORQUE OFF (FFA0) *0307* bit 4	STO (Safe torque off) requested and it functions correctly. Parameter *3025 STO OPERATION* is set to react with fault.	If this was not expected reaction to safety circuit interruption, check cabling of safety circuit connected to STO terminals X1C. If different reaction is required, change value of parameter *3025 STO OPERATION*. Reset fault before starting.
0045	STO1 LOST (FFA1) *0307* bit 5	STO (Safe torque off) input channel 1 has not de-energized, but channel 2 has. Opening contacts on channel 1 might have been damaged or there is a short circuit.	Check STO circuit cabling and opening of contacts in STO circuit.
0046	STO2 LOST (FFA2) *0307* bit 6	STO (Safe torque off) input channel 2 has not de-energized, but channel 1 has. Opening contacts on channel 2 might have been damaged or there is a short circuit.	Check STO circuit cabling and opening of contacts in STO circuit.

CODE	FAULT	CAUSE	WHAT TO DO
0101	SERF CORRUPT (FF55) *0307* bit 14	Drive internal error	Write down fault code and contact your local ABB representative.
0103	SERF MACRO (FF55) *0307* bit 14		
0201	DSP T1 OVERLOAD (6100) *0307* bit 13		
0202	DSP T2 OVERLOAD (6100) *0307* bit 13		
0203	DSP T3 OVERLOAD (6100) *0307* bit 13		
0204	DSP STACK ERROR (6100) *0307* bit 12		
0206	CB ID ERROR (5000) *0307* bit 11		
1000	PAR HZRPM (6320) *0307* bit 15	Incorrect speed/frequency limit parameter setting	Check parameter settings. Check that following applies: • *2001 MINIMUM SPEED* < *2002 MAXIMUM SPEED* • *2007 MINIMUM FREQ* < *2008 MAXIMUM FREQ* • *2001 MINIMUM SPEED* / *9908 MOTOR NOM SPEED*, *2002 MAXIMUM SPEED* / *9908 MOTOR NOM SPEED*, *2007 MINIMUM FREQ* / *9907 MOTOR NOM FREQ* and *2008 MAXIMUM FREQ* / *9907 MOTOR NOM FREQ* are within range.
1003	PAR AI SCALE (6320) *0307* bit 15	Incorrect analog input AI signal scaling	Check parameter group *13 ANALOG INPUTS* settings. Check that following applies: • *1301 MINIMUM AI1* < *1302 MAXIMUM AI1* • *1304 MINIMUM AI2* < *1305 MAXIMUM AI2*.

CODE	FAULT	CAUSE	WHAT TO DO
1004	PAR AO SCALE (6320) *0307* bit 15	Incorrect analog output AO signal scaling	Check parameter group *15 ANALOG OUTPUTS* settings. Check that following applies: • *1504 MINIMUM AO1* < *1505 MAXIMUM AO1*.
1005	PAR PCU 2 (6320) *0307* bit 15	Incorrect motor nominal power setting	Check parameter *9909 MOTOR NOM POWER* setting. Following must apply: • 1.1 < (*9906 MOTOR NOM CURR* · *9905 MOTOR NOM VOLT* · 1.73 / P_N) < 3.0 Where P_N = 1000 · *9909 MOTOR NOM POWER* (if units are in kW) or P_N = 746 · *9909 MOTOR NOM POWER* (if units are in hp).
1006	PAR EXT RO (6320) *0307* bit 15	Incorrect relay output extension parameters	Check parameter settings. Check that following applies: • Output relay extension module MREL-01 is connected to drive. • *1402 RELAY OUTPUT 2*, *1403 RELAY OUTPUT 3* and *1410 RELAY OUTPUT 4* have non-zero values. See *MREL-01 relay output extension module user's manual* (3AUA0000035974 [English]).
1007	PAR FBUSMISS (6320) *0307* bit 15	Fieldbus control has not been activated.	Check fieldbus parameter settings. See chapter *Fieldbus control with fieldbus adapter* on page *325*.
1009	PAR PCU 1 (6320) *0307* bit 15	Incorrect motor nominal speed/frequency setting	Check parameter settings. Following must apply: • 1 < (60 · *9907 MOTOR NOM FREQ* / *9908 MOTOR NOM SPEED*) < 16 • 0.8 < *9908 MOTOR NOM SPEED* / (120 · *9907 MOTOR NOM FREQ* / Motor poles) < 0.992
1015	PAR CUSTOM U/F (6320) *0307* bit 15	Incorrect voltage to frequency (U/f) ratio voltage setting.	Check parameter *2610 USER DEFINED U1* … *2617 USER DEFINED F4* settings.

CODE	FAULT	CAUSE	WHAT TO DO
1017	PAR SETUP 1 (6320) *0307* bit 15	Only two of the following can be used simultaneously: MTAC-01 encoder module, frequency input signal or frequency output signal.	Disable frequency output, frequency input or encoder: • change transistor output to digital mode (value of parameter *1804 TO MODE* = 0 [*DIGITAL*]), or • change frequency input selection to other value in parameter groups *11 REFERENCE SELECT*, *40 PROCESS PID SET 1*, *41 PROCESS PID SET 2* and *42 EXT / TRIM PID*, or • disable (parameter *5002 ENCODER ENABLE*) and remove MTAC-01 encoder module.

efesotomasyon.com

Embedded fieldbus faults

Embedded fieldbus faults can be traced by monitoring group *53 EFB PROTOCOL* parameters. See also fault/alarm *SERIAL 1 ERR* (*0028*).

No master device

If there is no master device on line, parameter *5306 EFB OK MESSAGES* and *5307 EFB CRC ERRORS* values remain unchanged.

What to do:

- Check that the network master is connected and properly configured.
- Check the cable connection.

Same device address

If two or more devices have the same address, parameter *5307 EFB CRC ERRORS* value increases with every read/write command.

What to do:

- Check the device addresses. No two devices on line may have the same address.

Incorrect wiring

If the communication wires are swapped (terminal A on one device is connected to terminal B on another device), parameter *5306 EFB OK MESSAGES*S value remains unchanged and parameter *5307 EFB CRC ERRORS* increases.

What to do:

- Check the RS-232/EIA-485 interface connection.

efesotomasyon.com

16

Maintenance and hardware diagnostics

What this chapter contains

The chapter contains preventive maintenance instructions and LED indicator descriptions.

Maintenance intervals

If installed in an appropriate environment, the drive requires very little maintenance. The table lists the routine maintenance intervals recommended by ABB.

Maintenance	Interval	Instruction
Reforming of capacitors	Every year when stored	See *Capacitors* on page *355*.
Check of dustiness, corrosion and temperature	Every year	
Replacement of the cooling fan (frame sizes R1…R4)	Every three years	See *Cooling fan* on page *354*.
Check and tightening of the power terminals	Every six years	See *Power connections* on page *355*.
Replacement of the battery in the assistant control panel	Every ten years	See *Changing the battery in the assistant control panel* on page *356*.
Testing of Safe torque off (STO) operation and reaction	Every year	See *Appendix: Safe torque off (STO)* on page *399*.

Consult your local ABB Service representative for more details on the maintenance. On the Internet, go to http://www.abb.com/drives and select *Drive Services – Maintenance and Field Services*.

Cooling fan

The drive's cooling fan has a life span of minimum 25 000 operating hours. The actual life span depends on the drive usage and ambient temperature. Automatic fan on/off control increases the life span (see parameter *1612 FAN CONTROL*).

When the assistant control panel is in use, the Notice handler assistant informs when the definable value of the operating hour counter is reached (see parameter *2901 COOLING FAN TRIG*). This information can also be passed to the relay output (see group *14 RELAY OUTPUTS*) regardless of the used panel type.

Fan failure can be predicted by the increasing noise from the fan bearings. If the drive is operated in a critical part of a process, fan replacement is recommended once these symptoms start appearing. Replacement fans are available from ABB. Do not use other than ABB specified spare parts.

Replacing the cooling fan (frame sizes R1…R4)

Only frame sizes R1…R4 include a fan; frame size R0 has natural cooling.

WARNING! Read and follow the instructions in chapter *Safety* on page *17*. Ignoring the instructions can cause physical injury or death, or damage to the equipment.

---

1. Stop the drive and disconnect it from the AC power source.
2. Remove the hood if the drive has the NEMA 1 option.
3. Lever the fan holder off the drive frame with eg a screwdriver and lift the hinged fan holder slightly upward from its front edge.
4. Free the fan cable from the clip.
5. Disconnect the fan cable.
6. Remove the fan holder from the hinges.

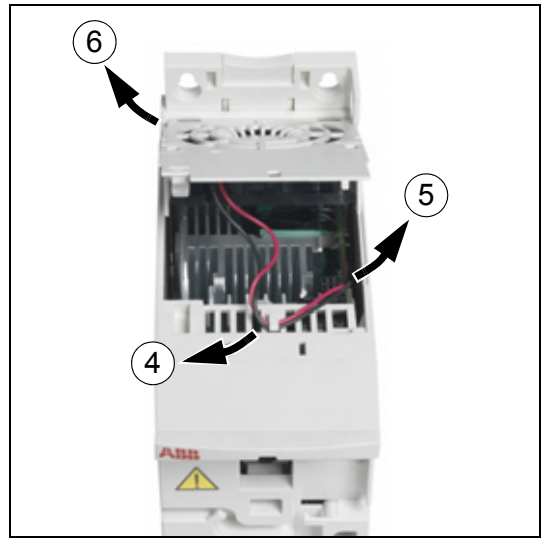

7. Install the new fan holder including the fan in reverse order.

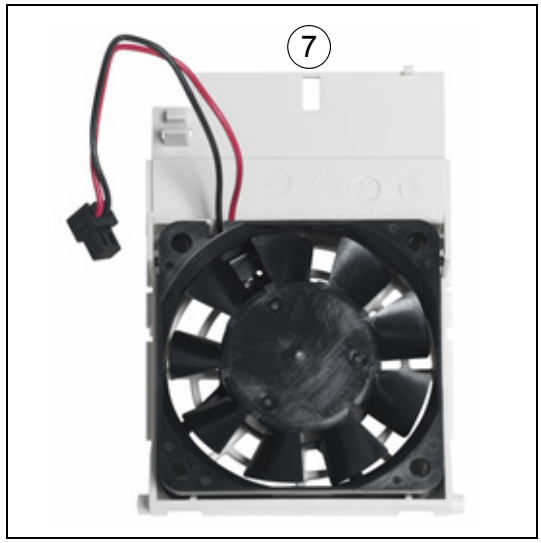

8. Restore power.

Capacitors

Reforming the capacitors

The capacitors must be reformed if the drive has been stored for a year. See section *Type designation label* on page *28* for how to find out the manufacturing time from the serial number. For information on reforming the capacitors, refer to *Guide for capacitor reforming in ACS50, ACS55, ACS150, ACS310, ACS350, ACS355, ACS550 and ACH550* (3AFE68735190 [English]), available on the Internet (go to http://www.abb.com and enter the code in the Search field).

Power connections

WARNING! Read and follow the instructions in chapter *Safety* on page *17*. Ignoring the instructions can cause physical injury or death, or damage to the equipment.

1. Stop the drive and disconnect it from the power line. Wait for five minutes to let the drive DC capacitors discharge. Ensure by measuring with a multimeter (impedance at least 1 Mohm) that there is no voltage present.
2. Check the tightness of the power cable connections. Use the tightening torques given in section *Terminal and lead-through data for the power cables* on page *366*.
3. Restore power.

Control panel

Cleaning the control panel

Use a soft damp cloth to clean the control panel. Avoid harsh cleaners which could scratch the display window.

Changing the battery in the assistant control panel

A battery is only used in assistant control panels that have the clock function available and enabled. The battery keeps the clock operating in memory during power interruptions.

The expected life for the battery is greater than ten years. To remove the battery, use a coin to rotate the battery holder on the back of the control panel. Replace the battery with type CR2032.

Note: The battery is NOT required for any control panel or drive functions, except the clock.

LEDs

There is a green and a red LED on the front of the drive. They are visible through the panel cover but invisible if a control panel is attached to the drive. The assistant control panel has one LED. The table below describes the LED indications.

Where	LED off	LED lit and steady		LED blinking	
On the front of the drive. If a control panel is attached to the drive, switch to remote control (otherwise a fault will be generated), and then remove the panel to be able to see the LEDs.	No power	Green	Power supply on the board OK	Green	Drive in an alarm state
		Red	Drive in a fault state. To reset the fault, press RESET from the control panel or switch off the drive power.	Red	Drive in a fault state. To reset the fault, switch off the drive power.
At the top left corner of the assistant control panel	Panel has no power or no drive connection.	Green	Drive in a normal state	Green	Drive in an alarm state
		Red	Drive in a fault state. To reset the fault, press RESET from the control panel or switch off the drive power.	Red	-

17

Technical data

What this chapter contains

The chapter contains the technical specifications of the drive, eg ratings, sizes and technical requirements as well as provisions for fulfilling the requirements for CE and other marks.

Ratings

Type ACS355-x = E/U [1]	Input		Output					Frame size
	I_{1N} A	I_{1N} (480 V) A	I_{2N} A	$I_{2,1\ min/10\ min}$ [2] A	I_{2max} A	P_N kW	P_N hp	
1-phase U_N = 200…240 V (200, 208, 220, 230, 240 V)								
01x-02A4-2	6.1	-	2.4	3.6	4.2	0.37	0.5	R0
01x-04A7-2	11.4	-	4.7	7.1	8.2	0.75	1	R1
01x-06A7-2	16.1	-	6.7	10.1	11.7	1.1	1.5	R1
01x-07A5-2	16.8	-	7.5	11.3	13.1	1.5	2	R2
01x-09A8-2	21.0	-	9.8	14.7	17.2	2.2	3	R2
3-phase U_N = 200…240 V (200, 208, 220, 230, 240 V)								
03x-02A4-2	4.3	-	2.4	3.6	4.2	0.37	0.5	R0
03x-03A5-2	6.1	-	3.5	5.3	6.1	0.55	0.75	R0
03x-04A7-2	7.6	-	4.7	7.1	8.2	0.75	1	R1
03x-06A7-2	11.8	-	6.7	10.1	11.7	1.1	1.5	R1
03x-07A5-2	12.0	-	7.5	11.3	13.1	1.5	2	R1
03x-09A8-2	14.3	-	9.8	14.7	17.2	2.2	3	R2
03x-13A3-2	21.7	-	13.3	20.0	23.3	3	4	R2
03x-17A6-2	24.8	-	17.6	26.4	30.8	4	5	R2
03x-24A4- 2	41	-	24.4	36.6	42.7	5.5	7.5	R3
03x-31A0-2	50	-	31	46.5	54.3	7.5	10	R4
03x-46A2-2	69	-	46.2	69.3	80.9	11.0	15	R4
3-phase U_N = 380…480 V (380, 400, 415, 440, 460, 480 V)								
03x-01A2-4	2.2	1.8	1.2	1.8	2.1	0.37	0.5	R0
03x-01A9-4	3.6	3.0	1.9	2.9	3.3	0.55	0.75	R0
03x-02A4-4	4.1	3.4	2.4	3.6	4.2	0.75	1	R1
03x-03A3-4	6.0	5.0	3.3	5.0	5.8	1.1	1.5	R1
03x-04A1-4	6.9	5.8	4.1	6.2	7.2	1.5	2	R1
03x-05A6-4	9.6	8.1	5.6	8.4	9.8	2.2	3	R1
03x-07A3-4	11.6	9.7	7.3	11.0	12.8	3	4	R1
03x-08A8-4	13.6	11.4	8.8	13.2	15.4	4	5	R1
03x-12A5-4	18.8	15.8	12.5	18.8	21.9	5.5	7.5	R3
03x-15A6-4	22.1	18.6	15.6	23.4	27.3	7.5	10	R3
03x-23A1-4	30.9	26.0	23.1	34.7	40.4	11	15	R3
03x-31A0-4	52	43.7	31	46.5	54.3	15	20	R4
03x-38A0-4	61	51.2	38	57	66.5	18.5	25	R4
03x-44A0-4	67	56.3	44	66	77.0	22.0	30	R4

[1] E = EMC filter connected (metal EMC filter screw installed), U = EMC filter disconnected (plastic EMC filter screw installed), US parametrization.

00353783.xls J

[2] Overloading not allowed through Common DC connection.

Definitions

Input	
I_{1N}	continuous rms input current (for dimensioning cables and fuses)
I_{1N} **(480 V)**	continuous rms input current (for dimensioning cables and fuses) for drives with 480 V input voltage
Output	
I_{2N}	continuous rms current. 50% overload is allowed for one minute every ten minutes.
$I_{2,1\ min/10\ min}$	maximum (50% overload) current allowed for one minute every ten minutes
I_{2max}	maximum output current. Available for two seconds at start, otherwise as long as allowed by the drive temperature.
P_N	typical motor power. The kilowatt ratings apply to most IEC 4-pole motors. The horsepower ratings apply to most NEMA 4-pole motors. This is also the maximum load through the Common DC connection and must not be exceeded.
R0…R4	ACS355 is manufactured in frame sizes R0…R4. Some instructions and other information that only concern certain frame sizes are marked with the symbol of the frame size (R0…R4).

Sizing

Drive sizing is based on the rated motor current and power. To achieve the rated motor power given in the table, the rated current of the drive must be higher than or equal to the rated motor current. Also the rated power of the drive must be higher than or equal to compared to the rated motor power. The power ratings are the same regardless of the supply voltage within one voltage range.

Note 1: The maximum allowed motor shaft power is limited to 1.5 · P_N. If the limit is exceeded, motor torque and current are automatically restricted. The function protects the input bridge of the drive against overload.

Note 2: The ratings apply at ambient temperature of 40 °C (104 °F) for I_{2N}.

Note 3: It is important to check that in Common DC systems the power flowing through the common DC connection does not exceed P_N.

Derating

I_{2N}: The load capacity decreases if the installation site ambient temperature exceeds 40 °C (104 °F), the altitude exceeds 1000 meters (3300 ft) or the switching frequency is changed from 4 kHz to 8, 12 or 16 kHz.

Temperature derating, I_{2N}

In the temperature range +40 °C…+50 °C (+104 °F…+122 °F), the rated output current (I_{2N}) is decreased by 1% for every additional 1 °C (1.8 °F). The output current is calculated by multiplying the current given in the rating table by the derating factor.

Example: If the ambient temperature is 50 °C (+122 °F), the derating factor is 100% - 1 $\frac{\%}{°C}$ · 10 °C = 90% or 0.90. The output current is then 0.90 · I_{2N}.

Altitude derating, I_{2N}

In altitudes 1000…2000 m (3300…6600 ft) above sea level, the derating is 1% for every 100 m (330 ft).

For 3-phase 200 V drives, the maximum altitude is 3000 m (9800 ft) above sea level. In altitudes 2000…3000 m (6600…9800 ft), the derating is 2% for every 100 m (330 ft).

Switching frequency derating, I_{2N}

The drive derates itself automatically when parameter *2607 SWITCH FREQ CTRL* = 1 (*ON*).

Switching frequency	Drive voltage rating	
	U_N = 200…240 V	U_N = 380…480 V
4 kHz	No derating	No derating
8 kHz	I_{2N} derated to 90%.	I_{2N} derated to 75% for R0 or to 80% for R1…R4.
12 kHz	I_{2N} derated to 80%.	I_{2N} derated to 50% for R0 or to 65% for R1…R4 and maximum ambient temperature derated to 30 °C (86 °F).
16 kHz	I_{2N} derated to 75%.	I_{2N} derated to 50% and maximum ambient temperature derated to 30 °C (86 °F).

When parameter *2607 SWITCH FREQ CTRL* = 2 (*ON (LOAD)*), the drive controls the switching frequency towards the selected switching frequency *2606 SWITCHING FREQ* if the drive's internal temperature allows.

Power cable sizes and fuses

Cable dimensioning for rated currents (I_{1N}) is shown in the table below together with the corresponding fuse types for short-circuit protection of the input power cable. **The rated fuse currents given in the table are the maximums for the mentioned fuse types.** If smaller fuse ratings are used, check that the fuse rms current rating is larger than the rated I_{1N} current given in section *Ratings* on page *358*. If 150% output power is needed, multiply current I_{1N} by 1.5. See also section *Selecting the power cables* on page *38*.

Check that the operating time of the fuse is below 0.5 seconds. The operating time depends on the fuse type, the supply network impedance as well as the cross-sectional area, material and length of the supply cable. In case the 0.5 seconds operating time is exceeded with the gG or T fuses, ultra rapid (aR) fuses will in most cases reduce the operating time to an acceptable level.

Note: Larger fuses must not be used when the input power cable is selected according to this table.

Type ACS355- x = E/U	Fuses		Size of copper conductor in cablings							
	gG	UL Class T (600 V)	Supply (U1, V1, W1)		Motor (U2, V2, W2)		PE		Brake (BRK+, BRK-)	
	A	A	mm^2	AWG	mm^2	AWG	mm^2	AWG	mm^2	AWG
1-phase U_N = 200…240 V (200, 208, 220, 230, 240 V)										
01x-02A4-2	10	10	2.5	14	0.75	18	2.5	14	2.5	14
01x-04A7-2	16	20	2.5	14	0.75	18	2.5	14	2.5	14
01x-06A7-2	16/20 [1)]	25	2.5	10	1.5	14	2.5	10	2.5	12
01x-07A5-2	20/25 [1)]	30	2.5	10	1.5	14	2.5	10	2.5	12
01x-09A8-2	25/35 [1)]	35	6	10	2.5	12	6	10	6	12
3-phase U_N = 200…240 V (200, 208, 220, 230, 240 V)										
03x-02A4-2	10	10	2.5	14	0.75	18	2.5	14	2.5	14
03x-03A5-2	10	10	2.5	14	0.75	18	2.5	14	2.5	14
03x-04A7-2	10	15	2.5	14	0.75	18	2.5	14	2.5	14
03x-06A7-2	16	15	2.5	12	1.5	14	2.5	12	2.5	12
03x-07A5-2	16	15	2.5	12	1.5	14	2.5	12	2.5	12
03x-09A8-2	16	20	2.5	12	2.5	12	2.5	12	2.5	12
03x-13A3-2	25	30	6	10	6	10	6	10	2.5	12
03x-17A6-2	25	35	6	10	6	10	6	10	2.5	12
03x-24A4- 2	63	60	10	8	10	8	10	8	6	10
03x-31A0-2	80	80	16	6	16	6	16	6	10	8
03x-46A2-2	100	100	25	2	25	2	16	4	10	8

Type ACS355- x = E/U	Fuses		Size of copper conductor in cablings							
	gG	UL Class T (600 V)	Supply (U1, V1, W1)		Motor (U2, V2, W2)		PE		Brake (BRK+, BRK-)	
	A	A	mm^2	AWG	mm^2	AWG	mm^2	AWG	mm^2	AWG
3-phase U_N = 380…480 V (380, 400, 415, 440, 460, 480 V)										
03x-01A2-4	10	10	2.5	14	0.75	18	2.5	14	2.5	14
03x-01A9-4	10	10	2.5	14	0.75	18	2.5	14	2.5	14
03x-02A4-4	10	10	2.5	14	0.75	18	2.5	14	2.5	14
03x-03A3-4	10	10	2.5	12	0.75	18	2.5	12	2.5	12
03x-04A1-4	16	15	2.5	12	0.75	18	2.5	12	2.5	12
03x-05A6-4	16	15	2.5	12	1.5	14	2.5	12	2.5	12
03x-07A3-4	16	20	2.5	12	1.5	14	2.5	12	2.5	12
03x-08A8-4	20	25	2.5	12	2.5	12	2.5	12	2.5	12
03x-12A5-4	25	30	6	10	6	10	6	10	2.5	12
03x-15A6-4	35	35	6	8	6	8	6	8	2.5	12
03x-23A1-4	50	50	10	8	10	8	10	8	6	10
03x-31A0-4	80	80	16	6	16	6	16	6	10	8
03x-38A0-4	100	100	16	4	16	4	16	4	10	8
03x-44A0-4	100	100	25	4	25	4	16	4	10	8

[1] If 50% overload capacity is needed, use the larger fuse alternative. 00353783.xls J

Dimensions, weights and free space requirements

Dimensions and weights

Frame size	Dimensions and weights											
	IP20 (cabinet) / UL open											
	H1		H2		H3		W		D		Weight	
	mm	in	mm	in	mm	in	mm	in	mm	in	kg	lb
R0	169	6.65	202	7.95	239	9.41	70	2.76	161	6.34	1.2	2.6
R1	169	6.65	202	7.95	239	9.41	70	2.76	161	6.34	1.2	2.6
R2	169	6.65	202	7.95	239	9.41	105	4.13	165	6.50	1.7	3.7
R3	169	6.65	202	7.95	236	9.29	169	6.65	169	6.65	2.9	6.4
R4	181	7.13	202	7.95	244	9.61	260	10.24	169	6.65	5.1	11.2

00353783.xls J

Frame size	Dimensions and weights									
	IP20 / NEMA 1									
	H4		H5		W		D		Weight	
	mm	in	mm	in	mm	in	mm	in	kg	lb
R0	257	10.12	280	11.02	70	2.76	169	6.65	1.6	3.5
R1	257	10.12	280	11.02	70	2.76	169	6.65	1.6	3.5
R2	257	10.12	282	11.10	105	4.13	169	6.65	2.1	4.6
R3	260	10.24	299	11.77	169	6.65	177	6.97	3.5	7.7
R4	270	10.63	320	12.60	260	10.24	177	6.97	5.7	12.6

00353783.xls J

Symbols

IP20 (cabinet) / UL open

H1 height without fastenings and clamping plate

H2 height with fastenings, without clamping plate

H3 height with fastenings and clamping plate

IP20 / NEMA 1

H4 height with fastenings and connection box

H5 height with fastenings, connection box and hood

Free space requirements

Frame size	Free space required					
	Above		Below		On the sides	
	mm	in	mm	in	mm	in
R0…R4	75	3	75	3	0	0

00353783.xls J

Losses, cooling data and noise

Losses and cooling data

Frame size R0 has natural convection cooling. Frame sizes R1…R4 are provided with an internal fan. The air flow direction is from bottom to top.

The table below specifies the heat dissipation in the main circuit at nominal load and in the control circuit with minimum load (I/O and panel not in use) and maximum load (all digital inputs in the on state and the panel, fieldbus and fan in use). The total heat dissipation is the sum of the heat dissipation in the main and control circuits.

Type ACS355-x = E/U	Heat dissipation			Air flow	
	Main circuit	Control circuit			
	Rated I_{1N} and I_{2N}	Min	Max		
	W	W	W	m^3/h	ft^3/min
1-phase U_N = 200…240 V (200, 208, 220, 230, 240 V)					
01x-02A4-2	25	6.1	22.7	-	-
01x-04A7-2	46	9.5	26.4	24	14
01x-06A7-2	71	9.5	26.4	24	14
01x-07A5-2	73	10.5	27.5	21	12
01x-09A8-2	96	10.5	27.5	21	12
3-phase U_N = 200…240 V (200, 208, 220, 230, 240 V)					
03x-02A4-2	19	6.1	22.7	-	-
03x-03A5-2	31	6.1	22.7	-	-
03x-04A7-2	38	9.5	26.4	24	14
03x-06A7-2	60	9.5	26.4	24	14
03x-07A5-2	62	9.5	26.4	21	12
03x-09A8-2	83	10.5	27.5	21	12
03x-13A3-2	112	10.5	27.5	52	31
03x-17A6-2	152	10.5	27.5	52	31
03x-24A4- 2	250	16.6	35.4	71	42
03x-31A0-2	270	33.4	57.8	96	57
03x-46A2-2	430	33.4	57.8	96	57

Type ACS355-x = E/U	Heat dissipation			Air flow	
	Main circuit	Control circuit			
	Rated I_{1N} and I_{2N}	Min	Max		
	W	W	W	m^3/h	ft^3/min
3-phase U_N = 380…480 V (380, 400, 415, 440, 460, 480 V)					
03x-01A2-4	11	6.6	24.4	-	-
03x-01A9-4	16	6.6	24.4	-	-
03x-02A4-4	21	9.8	28.7	13	8
03x-03A3-4	31	9.8	28.7	13	8
03x-04A1-4	40	9.8	28.7	13	8
03x-05A6-4	61	9.8	28.7	19	11
03x-07A3-4	74	14.1	32.7	24	14
03x-08A8-4	94	14.1	32.7	24	14
03x-12A5-4	130	12.0	31.2	52	31
03x-15A6-4	173	12.0	31.2	52	31
03x-23A1-4	266	16.6	35.4	71	42
03x-31A0-4	350	33.4	57.8	96	57
03x-38A0-4	440	33.4	57.8	96	57
03x-44A0-4	530	33.4	57.8	96	57

00353783.xls J

Noise

Frame size	Noise level
	dBA
R0	<30
R1	50…62
R2	50…62
R3	50…62
R4	<62

00353783.xls J

Terminal and lead-through data for the power cables

Frame size	Max. cable diameter for NEMA 1				U1, V1, W1, U2, V2, W2, BRK+ and BRK-				PE			
	U1, V1, W1, U2, V2, W2		BRK+ and BRK-		Terminal size		Tightening torque		Clamp size		Tightening torque	
	mm	in	mm	in	mm^2	AWG	N·m	lbf·in	mm^2	AWG	N·m	lbf·in
R0	16	0.63	16	0.63	4.0/6.0	10	0.8	7	25	3	1.2	11
R1	16	0.63	16	0.63	4.0/6.0	10	0.8	7	25	3	1.2	11
R2	16	0.63	16	0.63	4.0/6.0	10	0.8	7	25	3	1.2	11
R3	29	1.14	16	0.63	10.0/16.0	6	1.7	15	25	3	1.2	11
R4	35	1.38	29	1.14	25.0/35.0	2	2.5	22	25	3	1.2	11

00353783.xls J

Terminal and lead-through data for the control cables

Conductor size		Tightening torque	
Min/Max	Min/Max		
mm^2	AWG	N·m	lbf·in
0.25/1.5	24/16	0.5	4.4

Electric power network specification

Voltage (U_1)	200/208/220/230/240 V AC 1-phase for 200 V AC drives 200/208/220/230/240 V AC 3-phase for 200 V AC drives 380/400/415/440/460/480 V AC 3-phase for 400 V AC drives ±10% variation from converter nominal voltage is allowed as default.
Short-circuit capacity	Maximum allowed prospective short-circuit current at the input power connection as defined in IEC 60439-1 and UL 508C is 100 kA. The drive is suitable for use in a circuit capable of delivering not more than 100 kA rms symmetrical amperes at the drive maximum rated voltage.
Frequency	50/60 Hz ± 5%, maximum rate of change 17%/s
Imbalance	Max. ±3% of nominal phase to phase input voltage

Motor connection data

Motor type	Asynchronous induction motor or synchronous permanent magnet motor
Voltage (U_2)	0 to U_1, 3-phase symmetrical, U_{max} at the field weakening point
Short-circuit protection (IEC 61800-5-1, UL 508C)	The motor output is short-circuit proof by IEC 61800-5-1 and UL 508C.
Frequency	0…600 Hz
Frequency resolution	0.01 Hz
Current	See section *Ratings* on page *358*.
Power limit	1.5 · P_N
Field weakening point	10…600 Hz
Switching frequency	4, 8, 12 or 16 kHz (in scalar control)
Speed control	See section *Speed control performance figures* on page *143*.
Torque control	See section *Torque control performance figures* on page *143*.
Maximum recommended motor cable length	**Operational functionality and motor cable length** The drive is designed to operate with optimum performance with the following maximum motor cable lengths. The motor cable lengths may be extended with output chokes as shown in the table.

Frame size	Maximum motor cable length	
	m	ft
Standard drive, without external options		
R0	30	100
R1…R4	50	165
With external output chokes		
R0	60	195
R1…R4	100	330

Note: In multimotor systems, the calculated sum of all motor cable lengths must not exceed the maximum motor cable length given in the table.

EMC compatibility and motor cable length

To comply with the European EMC Directive (standard IEC/EN 61800-3), use the following maximum motor cable lengths for 4 kHz switching frequency.

All frame sizes	Maximum motor cable length, 4 kHz	
	m	ft
With internal EMC filter		
Second environment (category C3 [1])	30	100
With optional external EMC filter		
Second environment (category C3 [1])	30 (at least) [2]	100 (at least) [2]
First environment (category C2 [1])	30 (at least) [2]	100 (at least) [2]
First environment (category C1 [1])	10 (at least) [2]	30 (at least) [2]

[1] See the terms in section *Definitions* on page *373*.

[2] Maximum motor cable length is determined by the drive's operational factors. Contact your local ABB representative for the exact maximum lengths when using external EMC filters.

Note 1: The internal EMC filter must be disconnected by removing the EMC screw (see the figure on page *48*) while using the low leakage current EMC filter (LRFI-XX).

Note 2: Radiated emissions are according to C2 with and without an external EMC filter.

Note 3: Category C1 with conducted emissions only. Radiated emissions are not compatible when measured with standard emission measurement setup and should be checked or measured on cabinet and machine installations case by case.

Control connection data

Analog inputs X1A: 2 and 5 (AI1 and AI2)	Voltage signal,	unipolar	0 (2)…10 V, R_{in} = 675 kohm
		bipolar	-10…10 V, R_{in} = 675 kohm
	Current signal,	unipolar	0 (4)…20 mA, R_{in} = 100 ohm
		bipolar	-20…20 mA, R_{in} = 100 ohm
	Potentiometer reference value (X1A: 4)		10 V ± 1%, max. 10 mA, R < 10 kohm
	Resolution		0.1%
	Accuracy		±2%
Analog output X1A: 7 (AO)			0 (4)…20 mA, load < 500 ohm
Auxiliary voltage X1A: 9			24 V DC ± 10%, max. 200 mA
Digital inputs X1A: 12…16 (DI1…DI5)	Voltage		12…24 V DC with internal or external supply. Max. voltage for digital inputs 30 V DC.
	Type		PNP and NPN
	Input impedance, X1A: 12…15		R_{in} = 2 kohm
	Input impedance, X1A: 16		R_{in} = 4 kohm
Frequency input X1A: 16 (DI5)	X1A: 16 can be used either as a digital or as a frequency input.		
	Frequency		Pulse train 0…10 kHz with 50% duty cycle. 0…16 kHz between two ACS355 drives.
Relay output X1B: 17…19 (RO 1)	Type		NO + NC
	Max. switching voltage		250 V AC / 30 V DC
	Max. switching current		0.5 A / 30 V DC; 5 A / 230 V AC
	Max. continuous current		2 A rms
Digital output X1B: 20…21 (DO)	Type		Transistor output PNP
	Max. switching voltage		30 V DC
	Max. switching current		100 mA / 30 V DC, short-circuit protected
	Frequency		10 Hz …16 kHz
	Resolution		1 Hz
	Accuracy		0.2%
Frequency output X1B: 20…21 (FO)	X1A: 20…21 can be used either as a digital or as a frequency output.		
STO interface X1C: 23…26	See *Appendix: Safe torque off (STO)* on page *399*.		

Brake resistor connection

Short-circuit protection (IEC 61800-5-1, IEC 60439-1, UL 508C)

The brake resistor output is conditionally short-circuit proof by IEC/EN 61800-5-1 and UL 508C. For correct fuse selection, contact your local ABB representative. Rated conditional short-circuit current as defined in IEC 60439-1 and the Short-circuit test current by UL 508C is 100 kA.

Common DC connection

Maximum power through common DC connection is equal to the drive nominal power. See *ACS355 Common DC application guide* (3AUA0000070130 [English]).

Efficiency

Approximately 95 to 98% at nominal power level, depending on the drive size and options

Degrees of protection

IP20 (cabinet installation) / UL open: Standard enclosure. The drive must be installed in a cabinet to fulfil the requirements for shielding from contact.

IP20 / NEMA 1: Achieved with an option kit (MUL1-R1, MUL1-R3 or MUL1-R4) including a hood and a connection box.

Ambient conditions

Environmental limits for the drive are given below. The drive is to be used in a heated indoor controlled environment.

	Operation installed for stationary use	**Storage** in the protective package	**Transportation** in the protective package
Installation site altitude	0…2000 m (6600 ft) above sea level (above 1000 m [3300 ft], see section *Derating* on page *359*)	-	-
Air temperature	-10 … +50 °C (14 … 122 °F). No frost allowed. See section *Derating* on page *359*.	-40 … +70 °C ±2% (-40 … +158 °F ±2%)	-40 … +70 °C ±2% (-40 … +158 °F ±2%)
Relative humidity	0 … 95%	Max. 95%	Max. 95%
	No condensation allowed. Maximum allowed relative humidity is 60% in the presence of corrosive gases.		
Contamination levels (IEC 60721-3-3, IEC 60721-3-2, IEC 60721-3-1)	No conductive dust allowed.		
	According to IEC 60721-3-3, chemical gases: Class 3C2 solid particles: Class 3S2. **Note:** The drive must be installed in clean air according to enclosure classification. **Note:** Cooling air must be clean, free from corrosive materials and electrically conductive dust.	According to IEC 60721-3-1, chemical gases: Class 1C2 solid particles: Class 1S2	According to IEC 60721-3-2, chemical gases: Class 2C2 solid particles: Class 2S2
Sinusoidal vibration (IEC 60721-3-3)	Tested according to IEC 60721-3-3, mechanical conditions: Class 3M4 2…9 Hz, 3.0 mm (0.12 in) 9…200 Hz, 10 m/s^2 (33 ft/s^2)	-	-
Shock (IEC 60068-2-27, ISTA 1A)	Not allowed	According to ISTA 1A. Max. 100 m/s^2 (330 ft/s^2), 11 ms	According to ISTA 1A. Max. 100 m/s^2 (330 ft/s^2), 11 ms
Free fall	Not allowed	76 cm (30 in)	76 cm (30 in)

Materials

Drive enclosure	• PC/ABS 2 mm, PC+10%GF 2.5…3 mm and PA66+25%GF 1.5 mm, all in color NCS 1502-Y (RAL 9002 / PMS 420 C) • hot-dip zinc coated steel sheet 1.5 mm, thickness of coating 20 micrometers • extruded aluminium AlSi.
Package	Corrugated cardboard.
Disposal	The drive contains raw materials that should be recycled to preserve energy and natural resources. The package materials are environmentally compatible and recyclable. All metal parts can be recycled. The plastic parts can either be recycled or burned under controlled circumstances, according to local regulations. Most recyclable parts are marked with recycling marks. If recycling is not feasible, all parts excluding electrolytic capacitors and printed circuit boards can be landfilled. The DC capacitors contain electrolyte, which is classified as hazardous waste within the EU. They must be removed and handled according to local regulations. For further information on environmental aspects and more detailed recycling instructions, please contact your local ABB distributor.

Applicable standards

The drive complies with the following standards:

• **EN ISO 13849-1: 2008**	Safety of machinery - Safety related parts of control systems - Part 1: general principles for design
• **IEC/EN 60204-1: 2006**	Safety of machinery. Electrical equipment of machines. Part 1: General requirements. *Provisions for compliance:* The final assembler of the machine is responsible for installing - an emergency-stop device - a supply disconnecting device.
• **IEC/EN 62061: 2005**	Safety of machinery – Functional safety of safety-related electrical, electronic and programmable electronic control systems
• **IEC/EN 61800-3: 2004**	Adjustable speed electrical power drive systems. Part 3: EMC requirements and specific test methods
• **IEC/EN 61800-5-1: 2007**	Adjustable speed electrical power drive systems – Part 5-1: Safety requirements – Electrical, thermal and energy
• **IEC/EN 61800-5-2: 2007**	Adjustable speed electrical power drive systems – Part 5-2: Safety requirements. Functional.
• **UL 508C**	UL Standard for Safety, Power Conversion Equipment, third edition

CE marking

The CE mark is attached to the drive to verify that the drive follows the provisions of the European Low Voltage and EMC Directives.

Compliance with the European EMC Directive

The EMC Directive defines the requirements for immunity and emissions of electrical equipment used within the European Union. The EMC product standard (EN 61800-3:2004) covers requirements stated for drives. See section *Compliance with EN 61800-3:2004* on page *373*.

Compliance with EN 61800-3:2004

Definitions

EMC stands for **E**lectro**m**agnetic **C**ompatibility. It is the ability of electrical/electronic equipment to operate without problems within an electromagnetic environment. Likewise, the equipment must not disturb or interfere with any other product or system within its locality.

First environment includes establishments connected to a low-voltage network which supplies buildings used for domestic purposes.

Second environment includes establishments connected to a network not directly supplying domestic premises.

Drive of category C1: drive of rated voltage less than 1000 V, intended for use in the first environment.

Drive of category C2: drive of rated voltage less than 1000 V and intended to be installed and commissioned only by a professional when used in the first environment.

Note: A professional is a person or organization having necessary skills in installing and/or commissioning power drive systems, including their EMC aspects.

Category C2 has the same EMC emission limits as the earlier class first environment restricted distribution. EMC standard IEC/EN 61800-3 does not any more restrict the distribution of the drive, but the using, installation and commissioning are defined.

Drive of category C3: drive of rated voltage less than 1000 V, intended for use in the second environment and not intended for use in the first environment.

Category C3 has the same EMC emission limits as the earlier class second environment unrestricted distribution.

Category C1

The emission limits are complied with the following provisions:

1. The optional EMC filter is selected according to the ABB documentation and installed as specified in the EMC filter manual.
2. The motor and control cables are selected as specified in this manual.
3. The drive is installed according to the instructions given in this manual.
4. For the maximum motor cable length with 4 kHz switching frequency, see page *368*.

WARNING! In a domestic environment, this product may cause radio inference, in which case supplementary mitigation measures may be required.

Category C2

The emission limits are complied with the following provisions:

1. The optional EMC filter is selected according to the ABB documentation and installed as specified in the EMC filter manual.
2. The motor and control cables are selected as specified in this manual.
3. The drive is installed according to the instructions given in this manual.
4. For the maximum motor cable length with 4 kHz switching frequency, see page *368*.

WARNING! In a domestic environment, this product may cause radio inference, in which case supplementary mitigation measures may be required.

Category C3

The immunity performance of the drive complies with the demands of IEC/EN 61800-3, second environment (see page *373* for IEC/EN 61800-3 definitions).

The emission limits are complied with the following provisions:

1. The internal EMC filter is connected (the metal screw at EMC is in place) or the optional EMC filter is installed.
2. The motor and control cables are selected as specified in this manual.
3. The drive is installed according to the instructions given in this manual.
4. With the internal EMC filter: motor cable length 30 m (100 ft) with 4 kHz switching frequency. For the maximum motor cable length with an optional external EMC filter, see page *368*.

WARNING! A drive of category C3 is not intended to be used on a low-voltage public network which supplies domestic premises. Radio frequency interference is expected if the drive is used on such a network.

Note: It is not allowed to install a drive with the internal EMC filter connected on IT (ungrounded) systems. The supply network becomes connected to ground potential through the EMC filter capacitors which may cause danger or damage the drive.

Note: It is not allowed to install a drive with the internal EMC filter connected on a corner-grounded TN system as this would damage the drive.

UL marking

See the type designation label for the valid markings of your drive.

The UL mark is attached to the drive to verify that it meets UL requirements.

UL checklist

Input power connection – See section *Electric power network specification* on page *367*.

Disconnecting device (disconnecting means) – See *Selecting the supply disconnecting device (disconnecting means)* on page *37*.

Ambient conditions – The drives are to be used in a heated indoor controlled environment. See section *Ambient conditions* on page *371* for specific limits.

Input cable fuses – For installation in the United States, branch circuit protection must be provided in accordance with the National Electrical Code (NEC) and any applicable local codes. To fulfil this requirement, use the UL classified fuses given in section *Power cable sizes and fuses* on page *361*.

For installation in Canada, branch circuit protection must be provided in accordance with Canadian Electrical Code and any applicable provincial codes. To fulfil this requirement, use the UL classified fuses given in section *Power cable sizes and fuses* on page *361*.

Power cable selection – See section *Selecting the power cables* on page *38*.

Power cable connections – For the connection diagram and tightening torques, see section *Connecting the power cables* on page *49*.

Overload protection – The drive provides overload protection in accordance with the National Electrical Code (US).

Braking – The drive has an internal brake chopper. When applied with appropriately sized brake resistors, the brake chopper will allow the drive to dissipate regenerative energy (normally associated with quickly decelerating a motor). Brake resistor selection is discussed in *Appendix: Resistor braking* on page *389*.

C-Tick marking

See the type designation label for the valid markings of your drive.

C-Tick marking is required in Australia and New Zealand. A C-Tick mark is attached to the drive to verify compliance with the relevant standard (IEC 61800-3:2004 – Adjustable speed electrical power drive systems – Part 3: EMC product standard including specific test methods), mandated by the Trans-Tasman Electromagnetic Compatibility Scheme.

The Trans-Tasman Electromagnetic Compatibility Scheme (EMCS) was introduced by the Australian Communication Authority (ACA) and the Radio Spectrum Management Group (RSM) of the New Zealand Ministry of Economic Development (NZMED) in November 2001. The aim of the scheme is to protect the radio frequency spectrum by introducing technical limits for emission from electrical/electronic products.

For fulfilling the requirements of the standard, see section *Compliance with EN 61800-3:2004* on page *373*.

TÜV NORD Safety Approved mark

The presence of the TÜV NORD Safety Approved mark verifies that the drive has been evaluated and certified by TÜV NORD according to the following standards for the realization of the Safe torque off function (STO): IEC 61508-1:1998, IEC 61508-2:2000; SIL3, IEC 62061:2005 and ISO 13849-1:2006. See *Appendix: Safe torque off (STO)*.

RoHS marking

The RoHS mark is attached to the drive to verify that the drive follows the provisions of the European RoHS Directive. RoHS = the restriction of the use of certain hazardous substances in electrical and electronic equipment.

Compliance with the Machinery Directive

The drive is intended to be incorporated into machinery to constitute machinery covered by Machinery Directive (2006/42/EC) and does therefore not in every respect comply with the provisions of the directive. For more information, see the Declaration of Incorporation by ABB Drives.

Patent protection in the USA

This product is protected by one or more of the following US patents:

4,920,306	5,301,085	5,463,302	5,521,483	5,532,568	5,589,754	5,612,604
5,654,624	5,799,805	5,940,286	5,942,874	5,952,613	6,094,364	6,147,887
6,175,256	6,184,740	6,195,274	6,229,356	6,252,436	6,265,724	6,305,464
6,313,599	6,316,896	6,335,607	6,370,049	6,396,236	6,448,735	6,498,452
6,552,510	6,597,148	6,600,290	6,741,059	6,774,758	6,844,794	6,856,502
6,859,374	6,922,883	6,940,253	6,934,169	6,956,352	6,958,923	6,967,453
6,972,976	6,977,449	6,984,958	6,985,371	6,992,908	6,999,329	7,023,160
7,034,510	7,036,223	7,045,987	7,057,908	7,059,390	7,067,997	7,082,374
7,084,604	7,098,623	7,102,325	7,109,780	7,164,562	7,176,779	7,190,599
7,215,099	7,221,152	7,227,325	7,245,197	7,250,739	7,262,577	7,271,505
7,274,573	7,279,802	7,280,938	7,330,095	7,349,814	7,352,220	7,365,622
7,372,696	7,388,765	7,408,791	7,417,408	7,446,268	7,456,615	7,508,688
7,515,447	7,560,894	D503,931	D510,319	D510,320	D511,137	D511,150
D512,026	D512,696	D521,466	D541,743S	D541,744S	D541,745S	D548,182S
D548,183S	D573,090S					

Other patents pending.

18

Dimension drawings

Dimension drawings of the ACS355 are shown below. The dimensions are given in millimeters and [inches].

Frame sizes R0 and R1, IP20 (cabinet installation) / UL open

R1 and R0 are identical except for the fan at the top of R1.

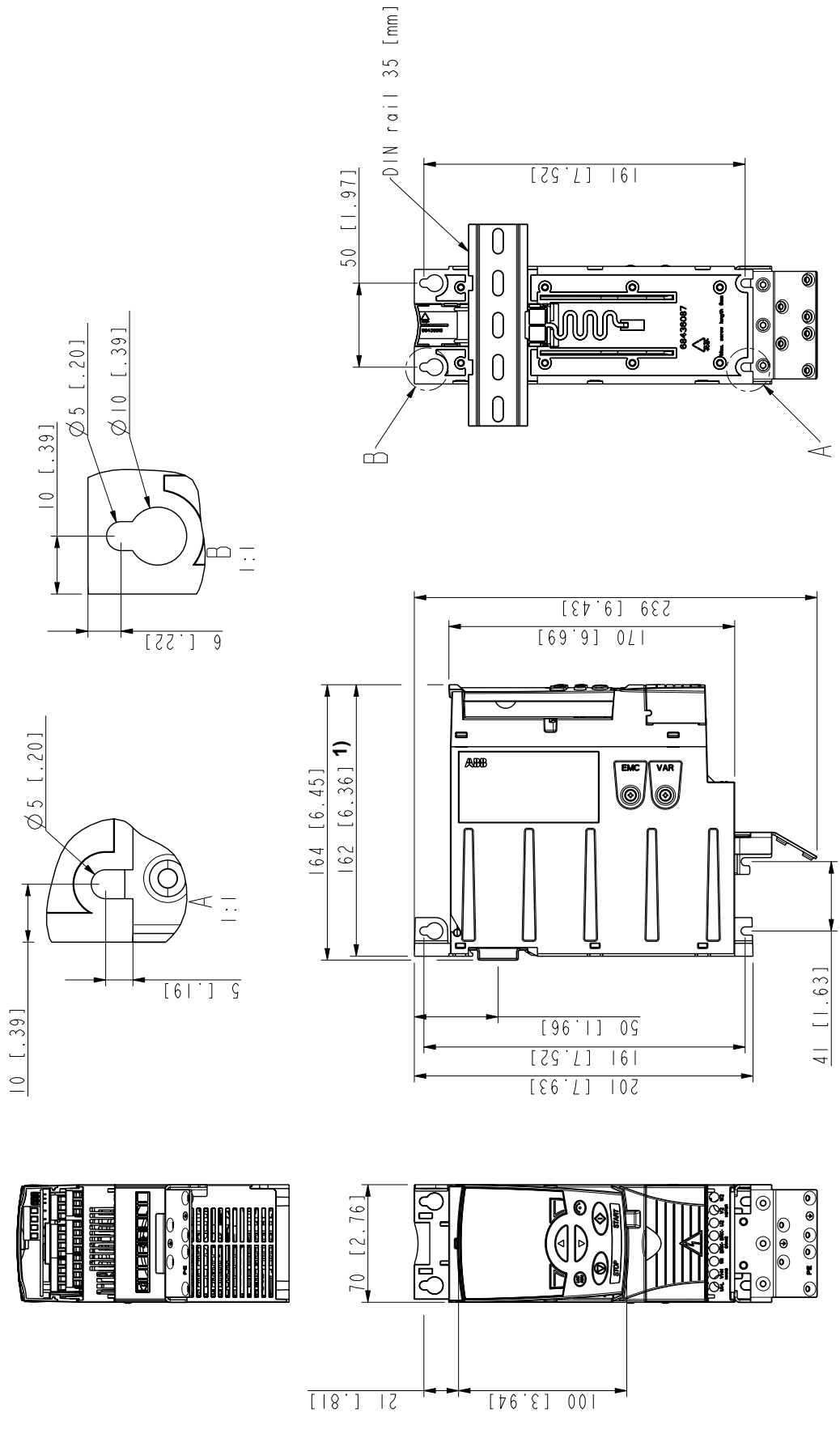

Frame sizes R0 and R1, IP20 (cabinet installation) / UL open

1) Extension modules add 26 mm (1.02 in) to the depth measure.

3AUA0000067784-A

Frame sizes R0 and R1, IP20 / NEMA 1

R1 and R0 are identical except for the fan at the top of R1.

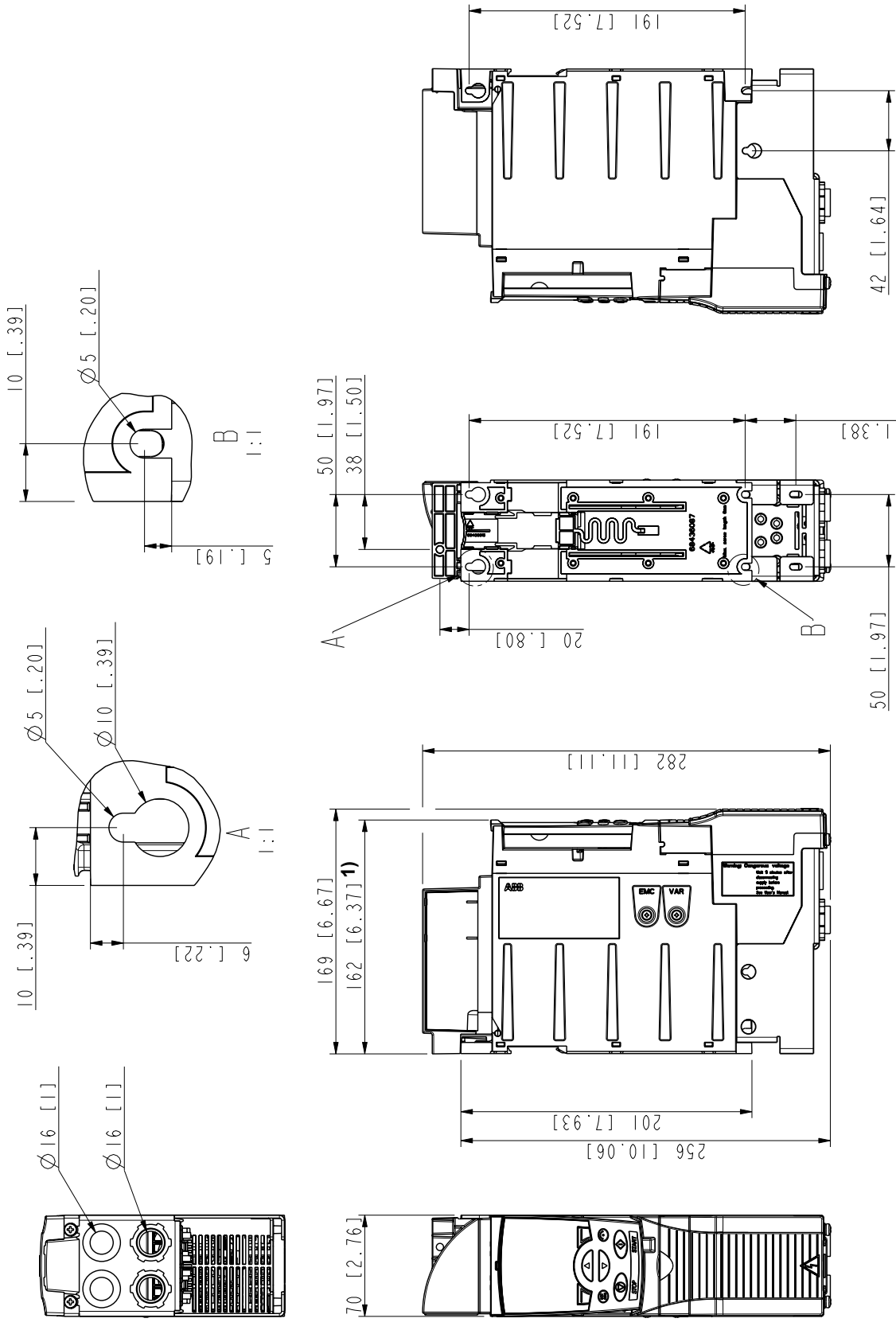

Frame sizes R0 and R1, IP20 / NEMA 1

1) Extension modules add 26 mm (1.02 in) to the depth measure.

3AUA0000067785-A

Frame size R2, IP20 (cabinet installation) / UL open

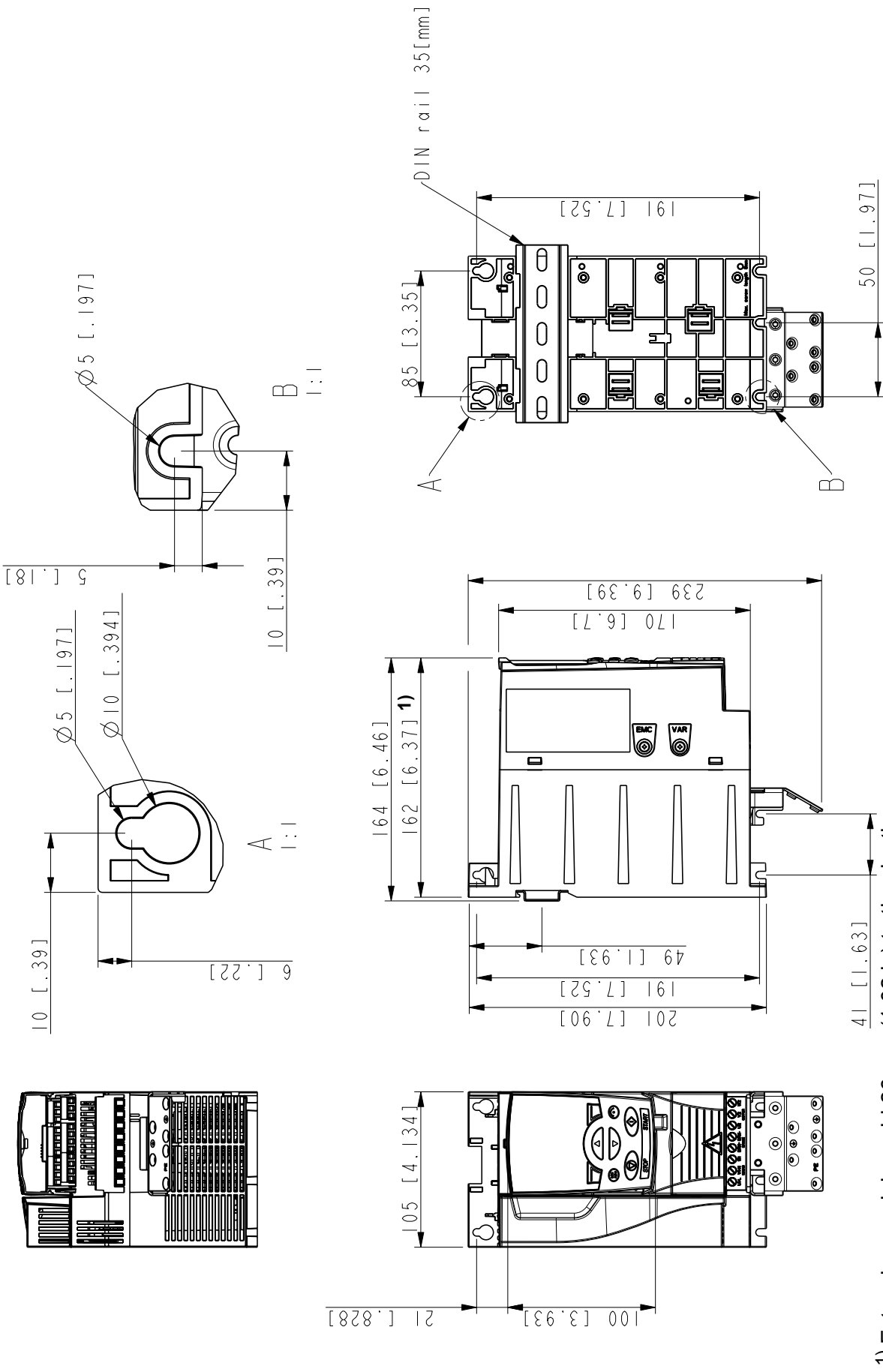

Frame size R2, IP20 (cabinet installation) / UL open

1) Extension modules add 26 mm (1.02 in) to the depth measure.

3AUA0000067782-A

Frame size R2, IP20 / NEMA 1

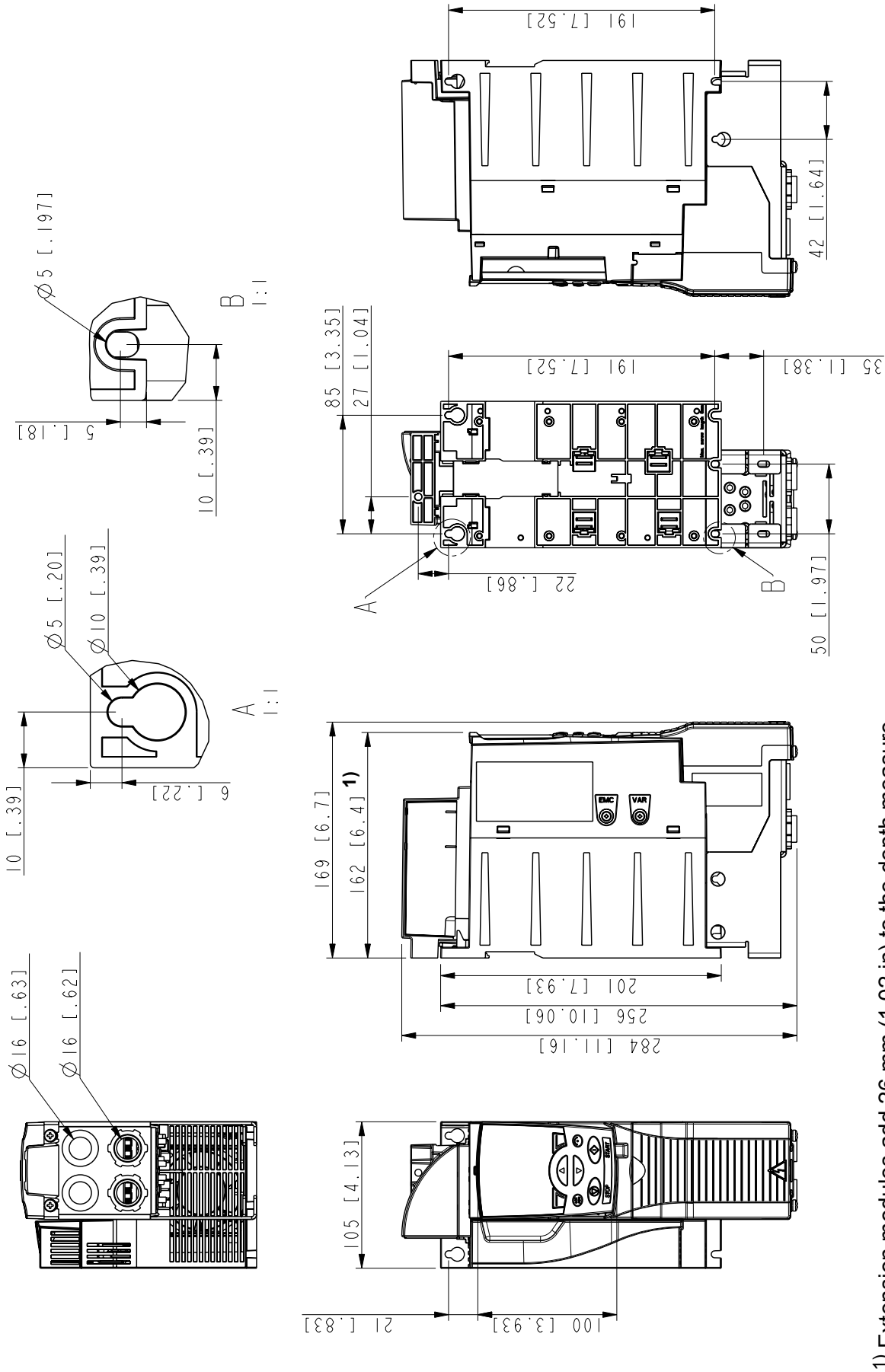

Frame size R2, IP20 / NEMA 1

1) Extension modules add 26 mm (1.02 in) to the depth measure.

3AUA0000067783-A

Frame size R3, IP20 (cabinet installation) / UL open

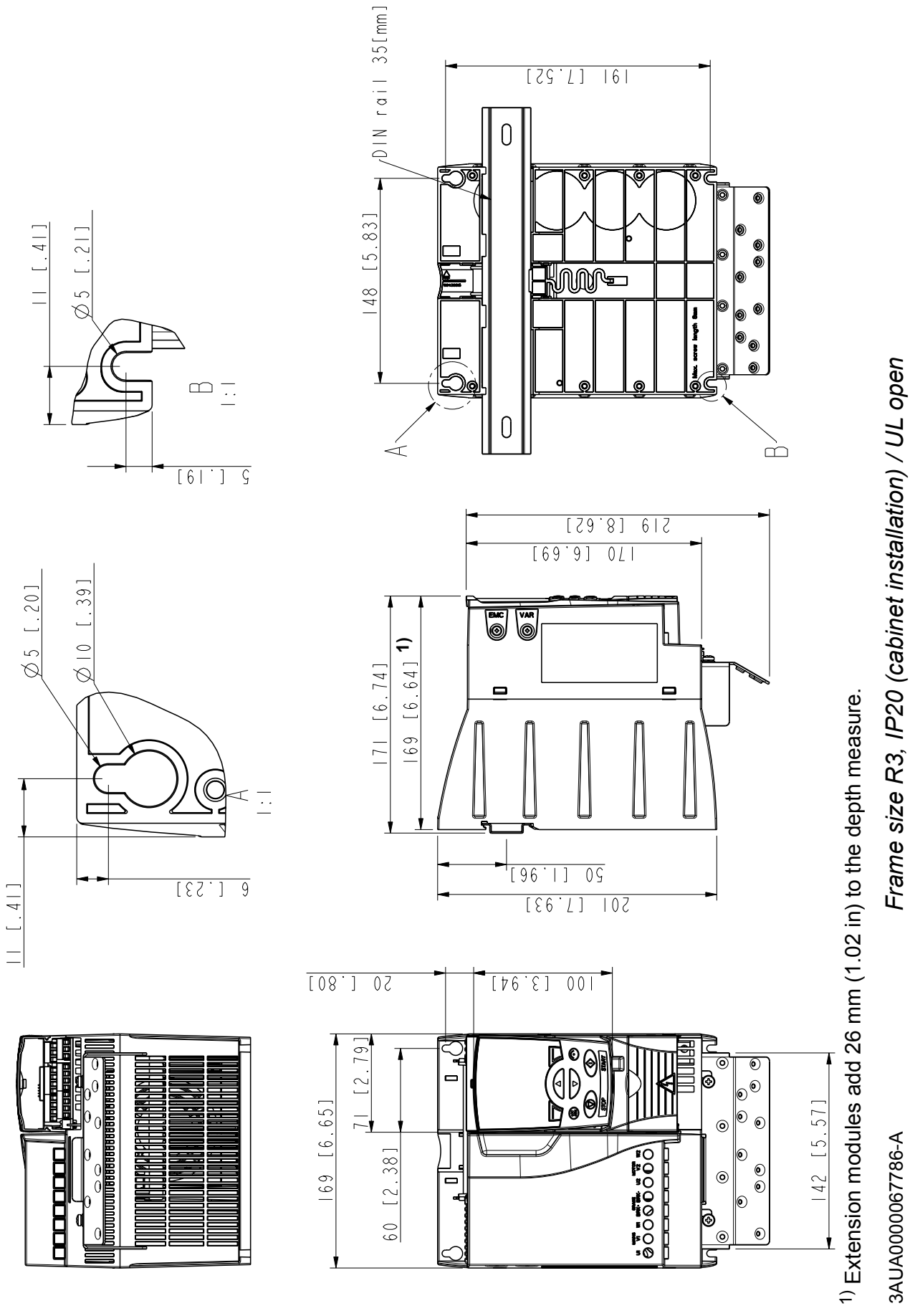

Frame size R3, IP20 (cabinet installation) / UL open

1) Extension modules add 26 mm (1.02 in) to the depth measure.

3AUA0000067786-A

Frame size R3, IP20 / NEMA 1

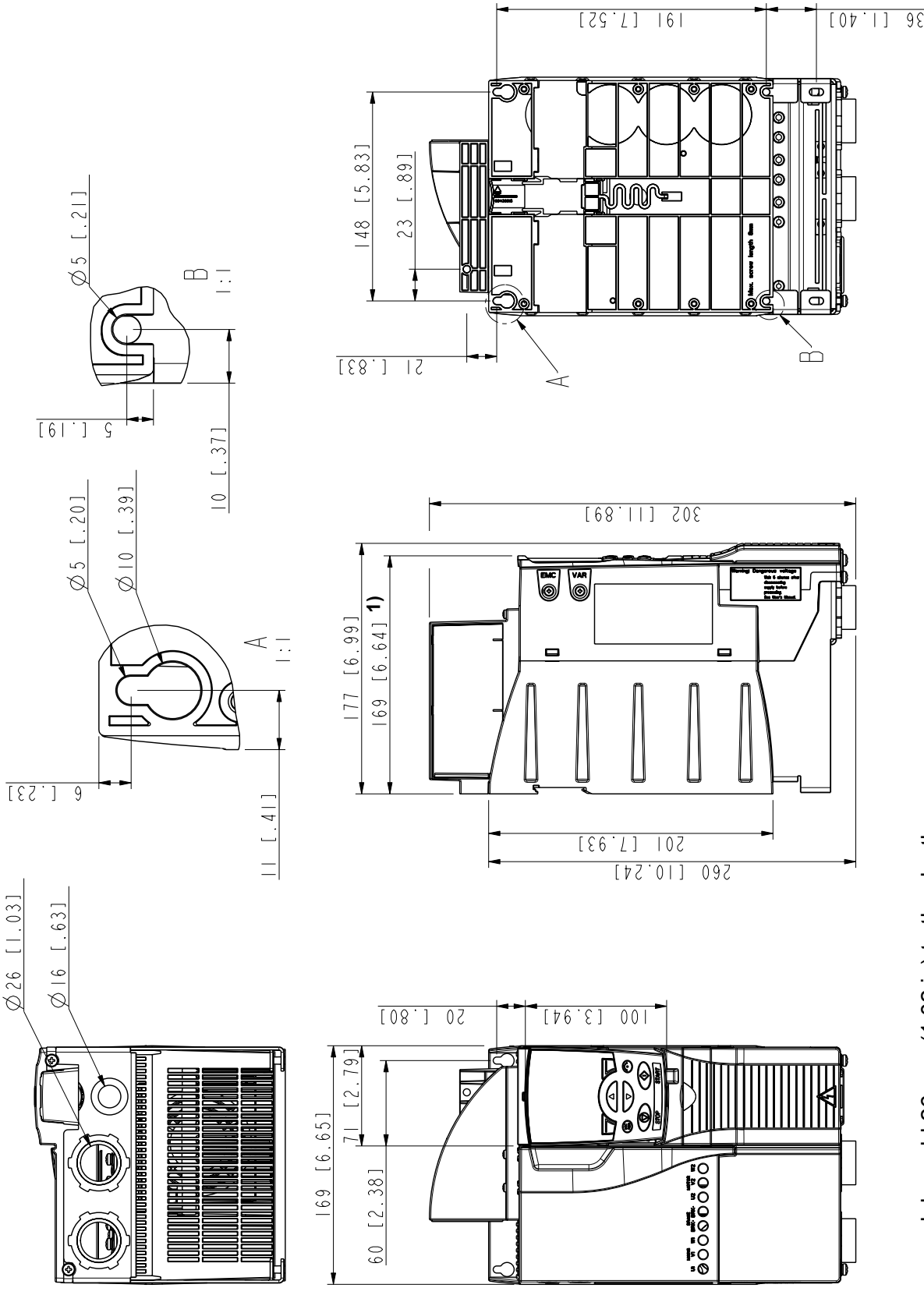

Frame size R3, IP20 / NEMA 1

1) Extension modules add 26 mm (1.02 in) to the depth measure.

3AUA0000067787-A

Frame size R4, IP20 (cabinet installation) / UL open

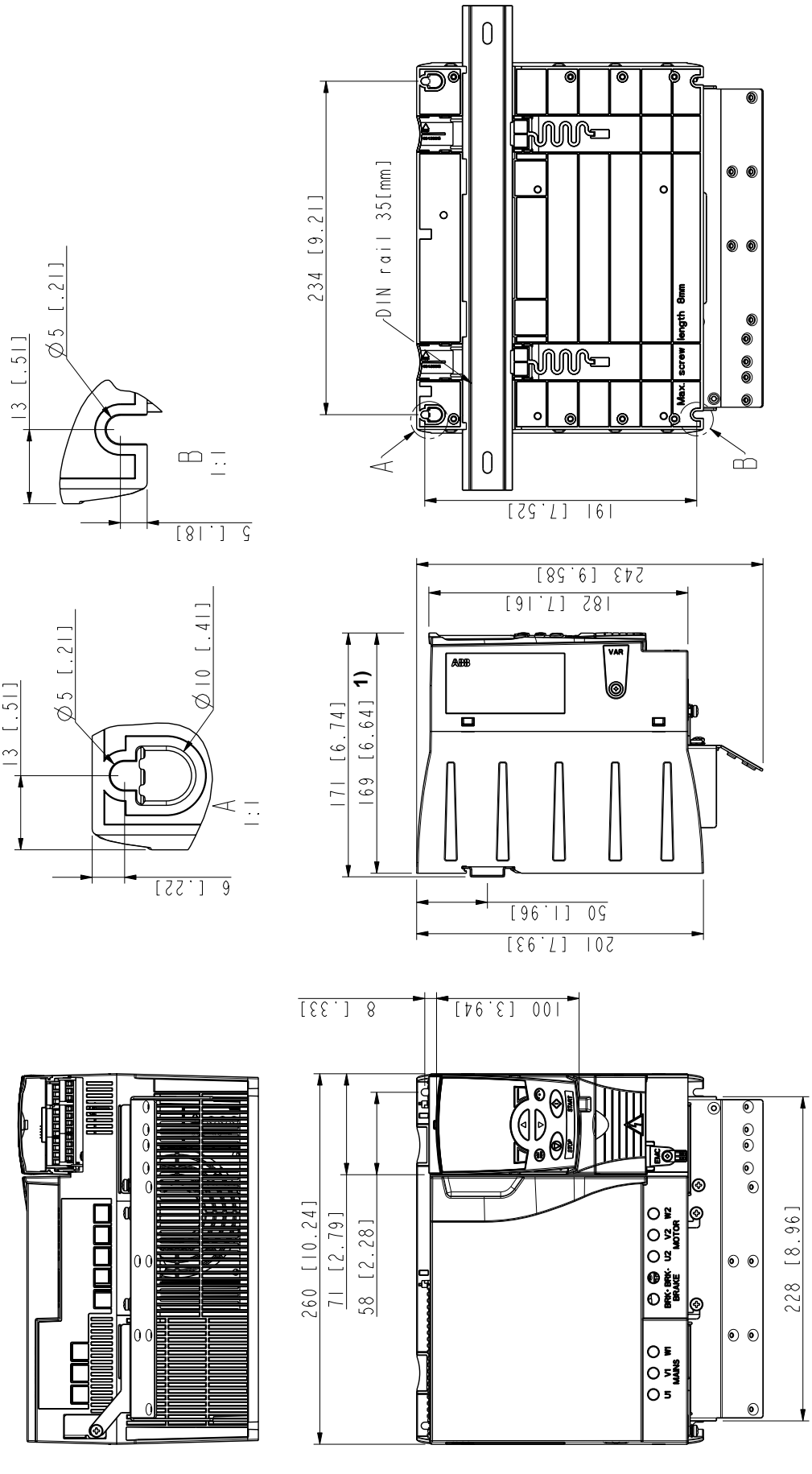

1) Extension modules add 26 mm (1.02 in) to the depth measure.

Frame size R4, IP20 (cabinet installation) / UL open

3AUA0000067836-A

Frame size R4, IP20 / NEMA 1

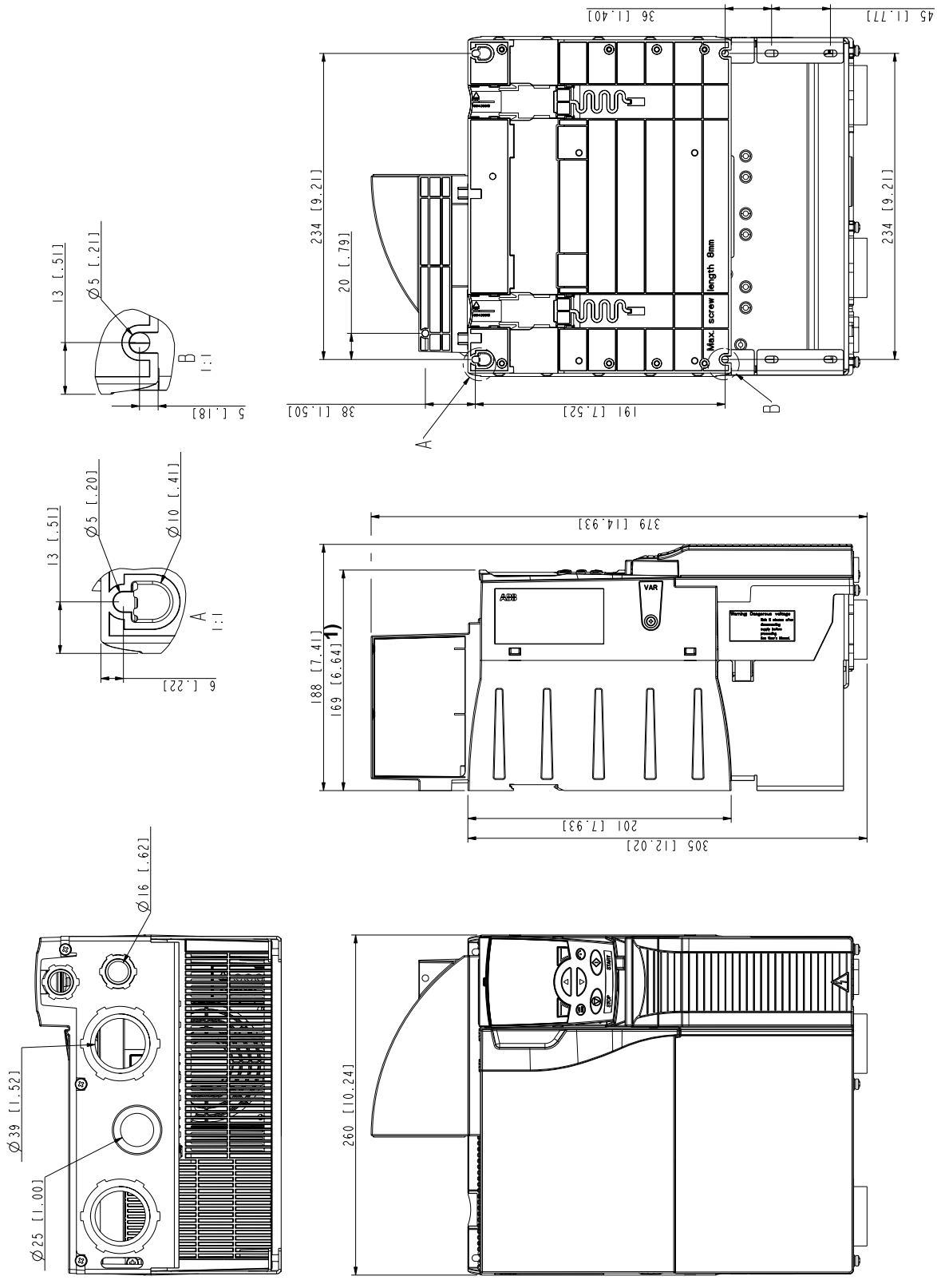

Frame size R4, IP20 / NEMA 1

1) Extension modules add 26 mm (1.02 in) to the depth measure.

3AUA0000067883-A

19

Appendix: Resistor braking

What this chapter contains

The chapter tells how to select the brake resistor and cables, protect the system, connect the brake resistor and enable resistor braking.

Planning the braking system

Selecting the brake resistor

ACS355 drives have an internal brake chopper as standard equipment. The brake resistor is selected using the table and equations presented in this section.

1. Determine the required maximum braking power P_{Rmax} for the application. P_{Rmax} must be smaller than P_{BRmax} given in the table on page *390* for the used drive type.
2. Calculate resistance R with Equation 1.
3. Calculate energy E_{Rpulse} with Equation 2.
4. Select the resistor so that the following conditions are met:
   - The rated power of the resistor must be greater than or equal to P_{Rmax}.
   - Resistance R must be between R_{min} and R_{max} given in the table for the used drive type.
   - The resistor must be able to dissipate energy E_{Rpulse} during the braking cycle T.

Equations for selecting the resistor:

Eq. 1. U_N = 200…240 V: $R = \frac{150000}{P_{Rmax}}$

U_N = 380…415 V: $R = \frac{450000}{P_{Rmax}}$

U_N = 415…480 V: $R = \frac{615000}{P_{Rmax}}$

Eq. 2. $E_{Rpulse} = P_{Rmax} \cdot t_{on}$

Eq. 3. $P_{Rave} = P_{Rmax} \cdot \frac{t_{on}}{T}$

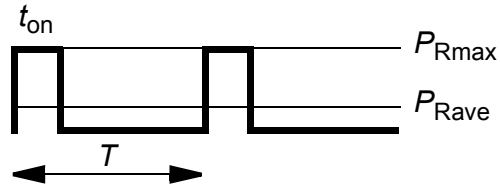

For conversion, use 1 hp = 746 W.

where
R = selected brake resistor value (ohm)
P_{Rmax} = maximum power during the braking cycle (W)
P_{Rave} = average power during the braking cycle (W)
E_{Rpulse} = energy conducted into the resistor during a single braking pulse (J)
t_{on} = length of the braking pulse (s)
T = length of the braking cycle (s).

Resistor types shown in the table are pre-dimensioned resistors using the maximum braking power with cyclic braking shown in the table. Resistors are available from ABB. Information is subject to change without further notice.

Type ACS355- x = E/U [1]	R_{min}	R_{max}	P_{BRmax}		Selection table by resistor type						
					CBR-V / CBT-H						Braking time [2]
	ohm	ohm	kW	hp	160	210	260	460	660	560	s
1-phase U_N = 200…240 V (200, 208, 220, 230, 240 V)											
01x-02A4-2	70	390	0.37	0.5	•						90
01x-04A7-2	40	200	0.75	1	•						45
01x-06A7-2	40	130	1.1	1.5	•						28
01x-07A5-2	30	100	1.5	2	•						19
01x-09A8-2	30	70	2.2	3	•						14
3-phase U_N = 200…240 V (200, 208, 220, 230, 240 V)											
03x-02A4-2	70	390	0.37	0.5	•						90
03x-03A5-2	70	260	0.55	0.75	•						60
03x-04A7-2	40	200	0.75	1	•						42
03x-06A7-2	40	130	1.1	1.5	•						29
03x-07A5-2	30	100	1.5	2	•						19
03x-09A8-2	30	70	2.2	3	•						14
03x-13A3-2	30	50	3.0	4			•				16
03x-17A6-2	30	40	4.0	5			•				12
03x-24A4- 2	18	25	5.5	7.5						•	45
03x-31A0-2	7	19	7.5	10						•	35
03x-46A2-2	7	13	11.0	15						•	23

Type ACS355- x = E/U [1]	R_{min}	R_{max}	P_{BRmax}		Selection table by resistor type						
					CBR-V / CBT-H						Braking time [2]
	ohm	ohm	kW	hp	160	210	260	460	660	560	s
3-phase U_N = 380…480 V (380, 400, 415, 440, 460, 480 V)											
03x-01A2-4	200	1180	0.37	0.5		•					90
03x-01A9-4	175	800	0.55	0.75		•					90
03x-02A4-4	165	590	0.75	1		•					60
03x-03A3-4	150	400	1.1	1.5		•					37
03x-04A1-4	130	300	1.5	2		•					27
03x-05A6-4	100	200	2.2	3		•					17
03x-07A3-4	70	150	3.0	4				•			29
03x-08A8-4	70	110	4.0	5				•			20
03x-12A5-4	40	80	5.5	7.5				•			15
03x-15A6-4	40	60	7.5	10				•			10
03x-23A1-4	30	40	11	15					•		10
03x-31A0-4	16	29	15	20						•	16
03x-38A0-4	13	23	18.5	25						•	13
03x-44A0-4	13	19	22.0	30						•	10

00353783.xls J

[1] E = EMC filter connected (metal EMC filter screw installed), U = EMC filter disconnected (plastic EMC filter screw installed), US parametrization.

[2] Braking time = maximum allowed braking time in seconds at P_{BRmax} every 120 seconds, at 40 °C ambient temperature.

Symbols

R_{min} = minimum allowed brake resistor that can be connected to the brake chopper
R_{max} = maximum allowed brake resistor that allows P_{BRmax}
P_{BRmax} = maximum braking capacity of the drive, must exceed the desired braking power.

Ratings by resistor type	CBR-V 160	CBR-V 210	CBR-V 260	CBR-V 460	CBR-V 660	CBT-H 560
Nominal power (W)	280	360	450	790	1130	2200
Resistance (ohm)	70	200	40	80	33	18

WARNING! Never use a brake resistor with a resistance below the minimum value specified for the particular drive. The drive and the internal chopper are not able to handle the overcurrent caused by the low resistance.

Selecting the brake resistor cables

Use a shielded cable with the conductor size specified in section *Power cable sizes and fuses* on page *361*. The maximum length of the resistor cable(s) is 5 m (16 ft).

Placing the brake resistor

Install all resistors in a place where they will cool.

WARNING! The materials near the brake resistor must be non-flammable. The surface temperature of the resistor is high. Air flowing from the resistor is of hundreds of degrees Celsius. Protect the resistor against contact.

Protecting the system in brake circuit fault situations

Protecting the system in cable and brake resistor short-circuit situations

For short-circuit protection of the brake resistor connection, see *Brake resistor connection* on page *370*. Alternatively, a two-conductor shielded cable with the same cross-sectional area can be used.

Protecting the system in brake resistor overheating situations

The following setup is essential for safety – it interrupts the main supply in fault situations involving chopper shorts:

- Equip the drive with a main contactor.
- Wire the contactor so that it opens if the resistor thermal switch opens (an overheated resistor opens the contactor).

Below is a simple wiring diagram example.

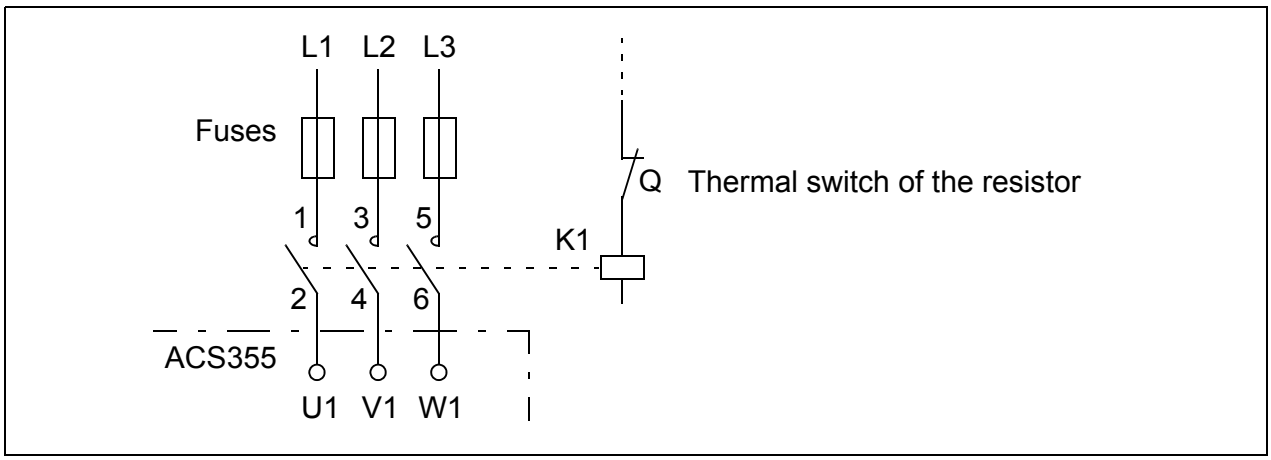

Electrical installation

For the brake resistor connections, see the power connection diagram of the drive on page *49*.

Start-up

To enable resistor braking, switch off the drive's overvoltage control by setting parameter *2005 OVERVOLT CTRL* to 0 (*DISABLE*).

20

Appendix: Extension modules

What this chapter contains

The appendix describes common features and mechanical installation of the optional extension modules for the ACS355: MPOW-01 auxiliary power module, MTAC-01 pulse encoder interface module and MREL-01 output relay module.

The appendix also describes specific features and electrical installation for the MPOW-01; for information on the MTAC-01 and MREL-01, refer to the corresponding user's manual.

Extension modules

Description

Extension modules have similar enclosures and they are mounted between the control panel and the drive. Therefore only one extension module can be used for a drive. ACS355 IP66/67 / UL Type 4X drives are not compatible with extension modules due to space restrictions.

The following optional extension modules are available for the ACS355. The drive automatically identifies the module, which is ready for use after the installation and power-up.

- MTAC-01 pulse encoder interface module
- MREL-01 output relay module
- MPOW-01 auxiliary power module.

Generic extension module layout

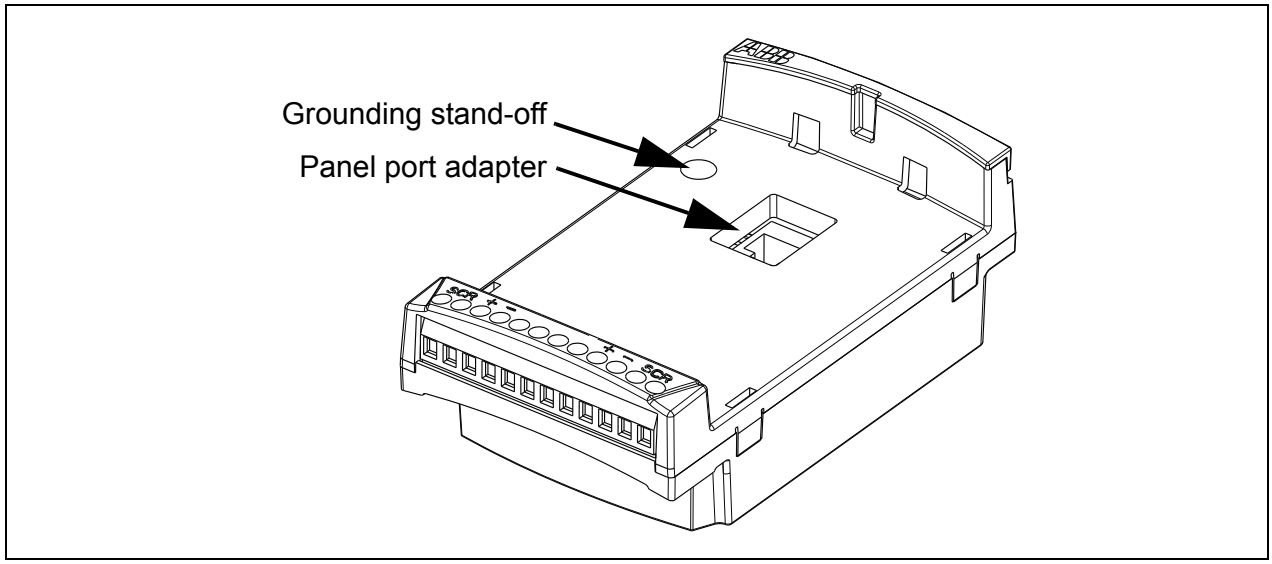

Installation

Checking the delivery

The option package contains:

- extension module
- grounding stand-off with an M3 × 12 screw
- panel port adapter (fixed to the MPOW-01 module at the factory).

Installing the extension module

WARNING! Follow the safety instructions given in chapter *Safety* on page *17*.

To install the extension module:

1. If not already off, remove input power from the drive.
2. Remove the control panel or panel cover. See how to remove the panel cover in step *1.* on page *56*.
3. Remove the grounding screw in the top left corner of the drive's control panel slot and install the grounding stand-off in its place.
4. For the MREL-01 and MTAC-01, ensure that the panel port adapter is attached to either the panel port of the drive or the mate part of the extension module. The adapter of the MPOW-01 is already fixed to the extension module at the factory.
5. Gently and firmly install the extension module to the drive's panel slot directly from the front.

Note: Signal and power connections to the drive are automatically made through a 6-pin connector.

6. Ground the extension module by inserting the screw removed from the drive in the top left corner of the extension module. Tighten the screw using a torque of 0.8 N·m (7 lbf·in).

Note: Correct insertion and tightening of the screw is essential for fulfilling the EMC requirements and proper operation of the extension module.

7. Install the control panel or panel cover on the extension module.
8. Electrical installation is module-specific. For MPOW-01, see section *Electrical installation* on page *397*. For MTAC-01, see *MTAC-01 pulse encoder interface module user's manual* (3AFE68591091 [English]), and for MREL-01, see *MREL-01 relay output extension module user's manual* (3AUA0000035957 [English]).

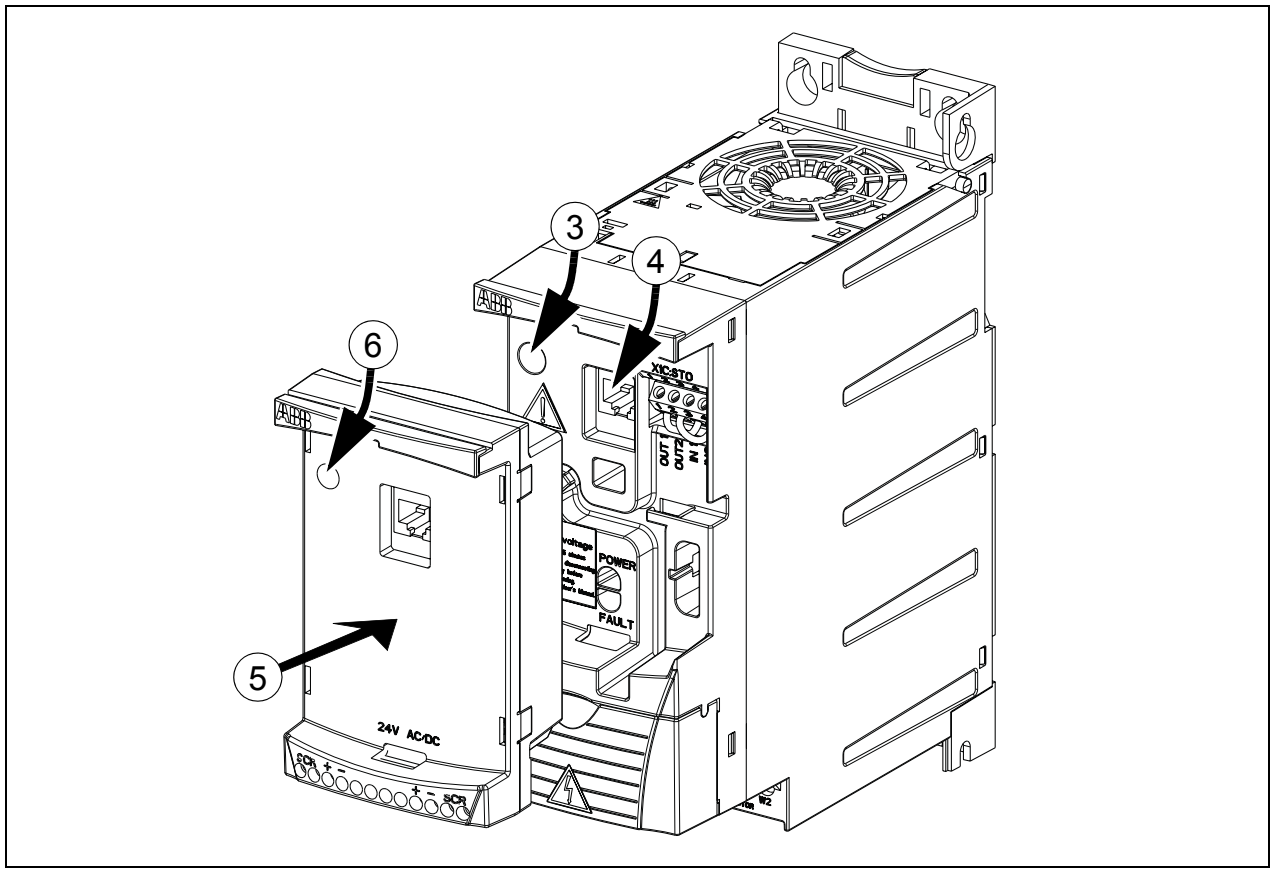

Technical data

Dimensions

Extension module dimensions are shown in the figure below.

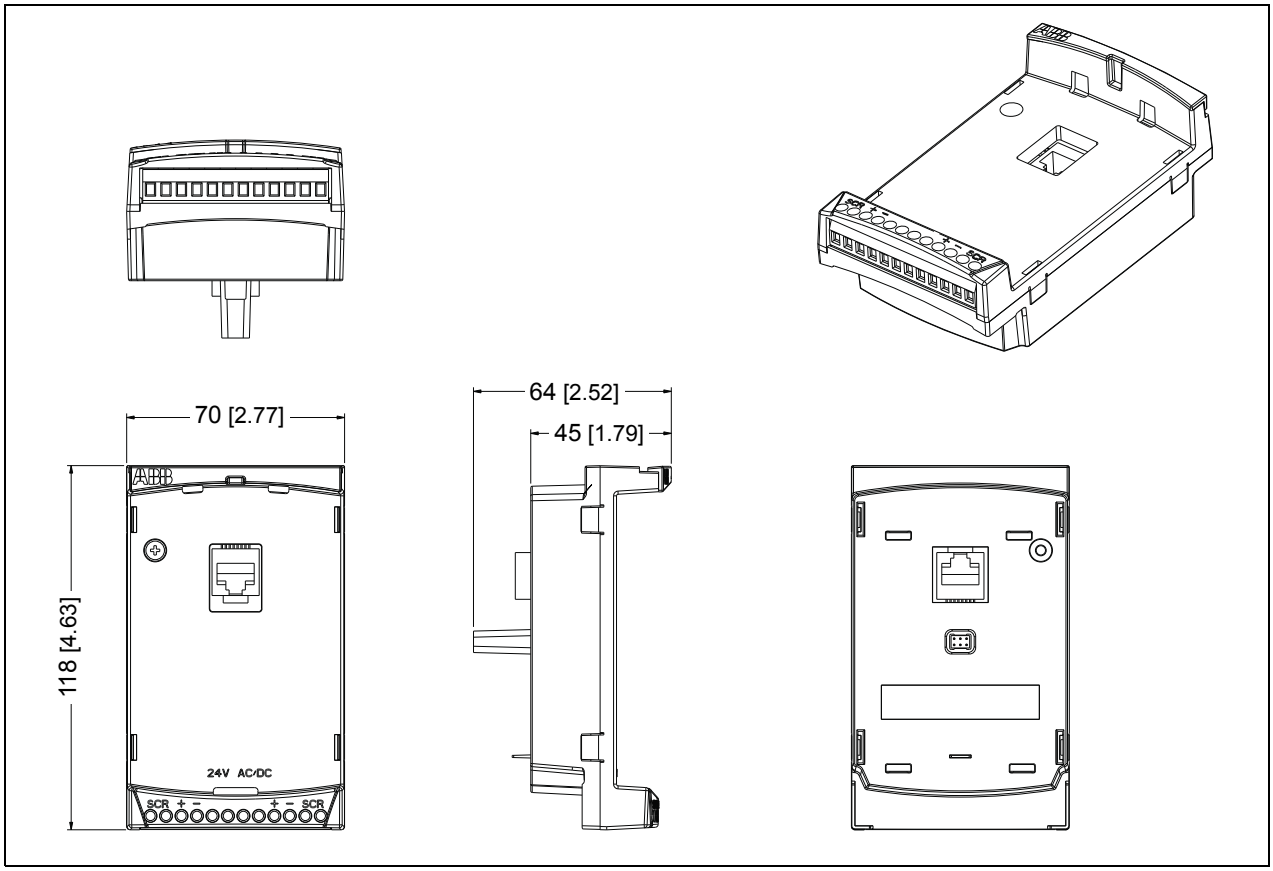

Generic extension module specifications

- Enclosure degree of protection: IP20
- All materials are UL/CSA-approved.
- When used with ACS355 drives, the extension modules comply with EMC standard EN/IEC 61800-3:2004 for electromagnetic compatibility and EN/IEC 61800-5-1:2005 for electrical safety requirements.

MTAC-01 pulse encoder interface module

See *MTAC-01 pulse encoder interface module user's manual* (3AFE68591091 [English]) delivered with this option.

MREL-01 output relay module

See *MREL-01 relay output extension module user's manual* (3AUA0000035957 [English]) delivered with this option.

MPOW-01 auxiliary power module

Description

The MPOW-01 auxiliary power module is used in installations where the drive's control part is required to be powered during network failures and maintenance interruptions. The MPOW-01 provides auxiliary voltages to the control panel, fieldbus and I/O.

Note: If you change any of the drive parameters when the drive is powered through the MPOW-01, you have to force parameter saving with parameter *1607 PARAM SAVE* by setting the value to (1) *SAVE…*; otherwise all changed data will be lost.

Electrical installation

Wiring

- Use 0.5…1.5 mm^2 (20…16 AWG) shielded cable.
- Connect the control wires according to the diagram in section *Terminal designations* below. Use a tightening torque of 0.8 N·m (7 lbf·in).

Terminal designations

The diagram below shows the MPOW-01 terminals and how the MPOW-01 module is connected to the external power supply and how the modules are daisy chained.

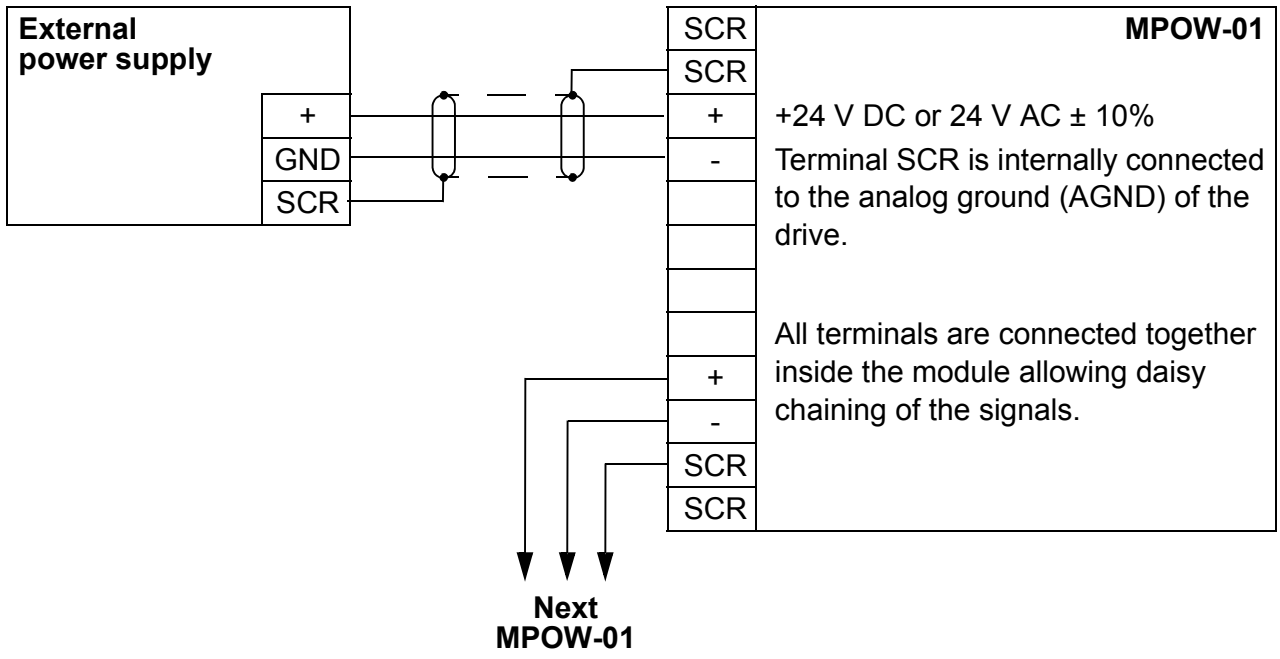

Technical data

Specifications

- Input voltage: +24 V DC or 24 V AC ± 10%
- Maximum load 1200 mA rms
- Power losses with maximum load 6 W
- Designed lifetime of the MPOW-01 module is 50 000 hours in the specified ambient conditions of the drive (see section *Ambient conditions* on page *371*).

21

Appendix: Safe torque off (STO)

What this appendix contains

The appendix describes the basics of the Safe torque off function (STO) for the ACS355. In addition, application features and technical data for the safety system calculation are presented.

Basics

The drive supports the Safe torque off (STO) function according to standards EN 61800-5-2; EN/ISO 13849-1:2006, IEC/EN 60204-1:1997; EN 61508:2002, EN 1037:1996, and IEC 62061:2005 (SILCL 3). The function also corresponds to an uncontrolled stop in accordance with category 0 of IEC 60204-1.

The STO may be used where power removal is required to prevent an unexpected start. The function disables the control voltage of the power semiconductors of the drive output stage, thus preventing the inverter from generating the voltage required to rotate the motor (see the diagram below). With this function, short-time operations (like cleaning) and/or maintenance work on non-electrical parts of the machinery can be performed without switching off the power supply to the drive.

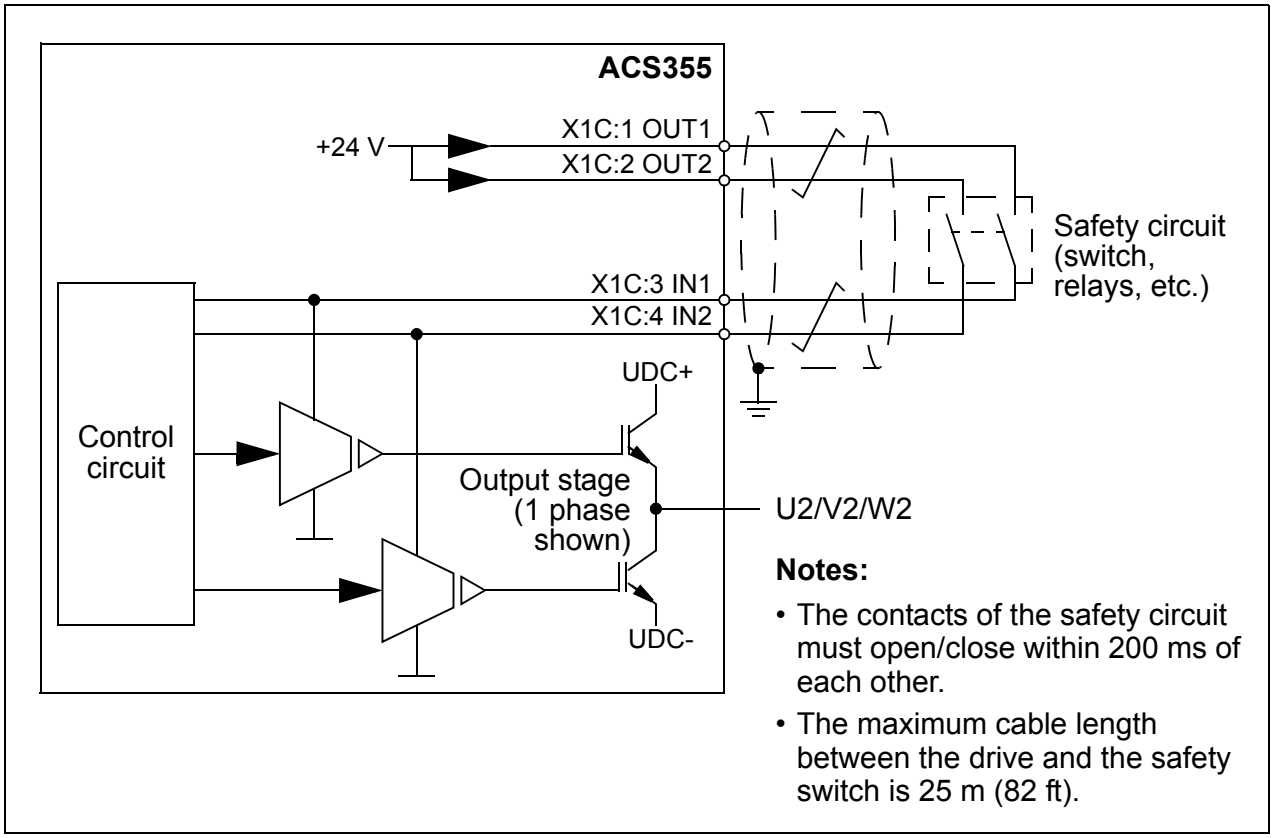

WARNING! The STO function does not disconnect the voltage of the main and auxiliary circuits from the drive. Therefore maintenance work on electrical parts of the drive or the motor can only be carried out after isolating the drive system from the main supply.

Note: It is not recommended to stop the drive using the STO. If a running drive is stopped with this function, the drive will trip and stop by coasting. If this is not acceptable eg, it causes danger, the drive and machinery must be stopped using the appropriate stopping mode before using this function.

Note: Permanent magnet motor drives in case of a multiple IGBT power semiconductor failure: In spite of the activation of the STO function, the drive system can produce an alignment torque which maximally rotates the motor shaft by 180/*p* degrees, where *p* denotes the pole pair number.

Program features, settings and diagnostics

Operation of the STO function and its diagnostics function

When both STO inputs are energized, the STO function is in the standby state and the drive operates normally. If either of the STO inputs is de-energized, the STO function awakes, stops the drive and disables start. Start is possible only after the

STO inputs have been energized, and any of the drive reactions have been reset. Drive event can be parametrized according to the table below.

Parameter	Selection values	Explanation
3025 STO OPERATION	(1) *ONLY FAULT*	Drive event on successful STO operation is fault *SAFE TORQUE OFF*. The fault bit is updated.
	(2) *ALARM&FAULT*	Drive event on successful STO operation is alarm *SAFE TORQUE OFF* when stopped and fault *SAFE TORQUE OFF* when running. Fault and alarm bits are updated.
	(3) *NO & FAULT*	Drive event on successful STO operation is no alarm when stopped and fault *SAFE TORQUE OFF* when running. The fault bit is updated.
	Default: (4) *ONLY ALARM*	Drive event on successful STO operation is alarm *SAFE TORQUE OFF*. The alarm bit is updated. Start command must be toggled to continue running the drive.

If the operation delay between the inputs is excessive or only one STO input is de-energized, an event is always considered a fault (*STO1 LOST* or *STO2 LOST*). This event cannot be changed. De-energizing of only one STO input is not considered normal operation since the safety integrity level would decrease if only one channel is used.

STO status indications

When both STO inputs are energized, the STO function is in the standby state and the drive operates normally. If either of the STO inputs or both are de-energized, the STO function is executed in a safe manner and corresponding reaction is updated according to the table below.

STO event	Fault name	Description	Status
Fault *0044*	*SAFE TORQUE OFF*	STO functions correctly and the fault must be reset before starting.	*0307 FAULT WORD 3* bit 4
Fault *0045*	*STO1 LOST*	STO input channel 1 has not de-energized, but channel 2 has. Opening contacts on channel 1 might have been damaged or there is a short circuit.	*0307 FAULT WORD 3* bit 5
Fault *0046*	*STO2 LOST*	STO input channel 2 has not de-energized, but channel 1 has. Opening contacts on channel 2 might have been damaged or there is a short circuit.	*0307 FAULT WORD 3* bit 6
Alarm *2035*	*SAFE TORQUE OFF*	STO functions correctly.	*0309 ALARM WORD 2* bit 13

STO function activation and indication delays

STO activation delay is below 1 ms. STO indication delay (time from the de-energization of any STO input to the updating of the status bit) is 200 ms.

Note: If any STO channel is toggled very fast, it is possible that the drive trips to overcurrent or short circuit.

Installation

Connect the cables as shown in the diagram below.

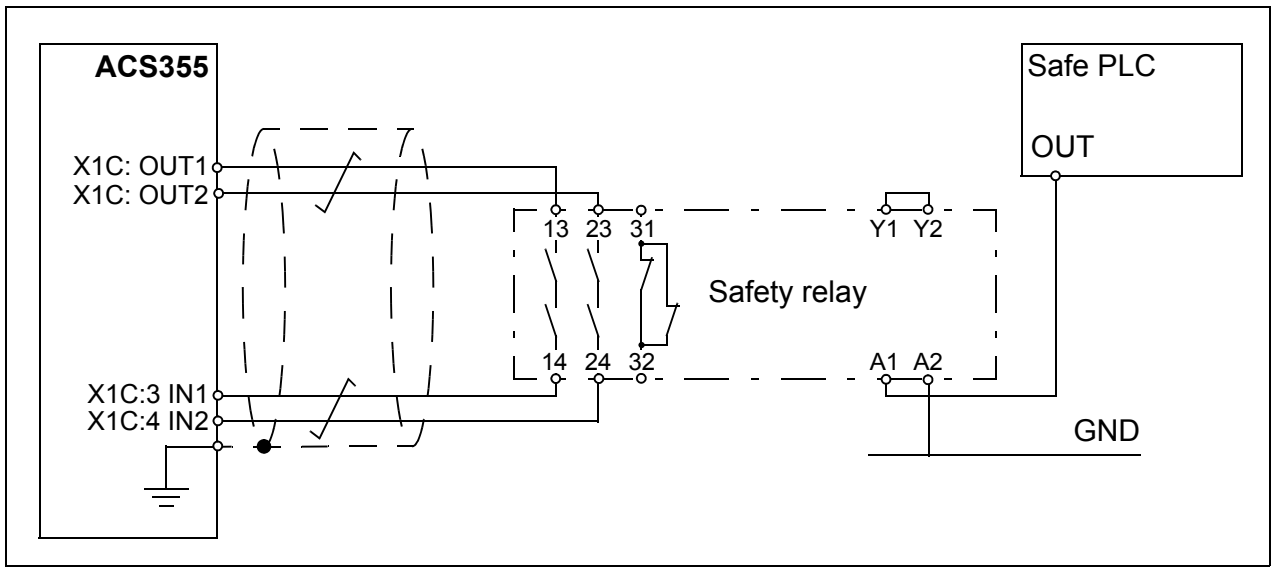

STO input channels can be also supplied with an external power supply. The required supply current is maximum 15 mA for each STO channel, and the voltage requirement is 24 V DC +/-10%. The negative terminal of the power supply must be connected to the analog ground (AGND) of the drive.

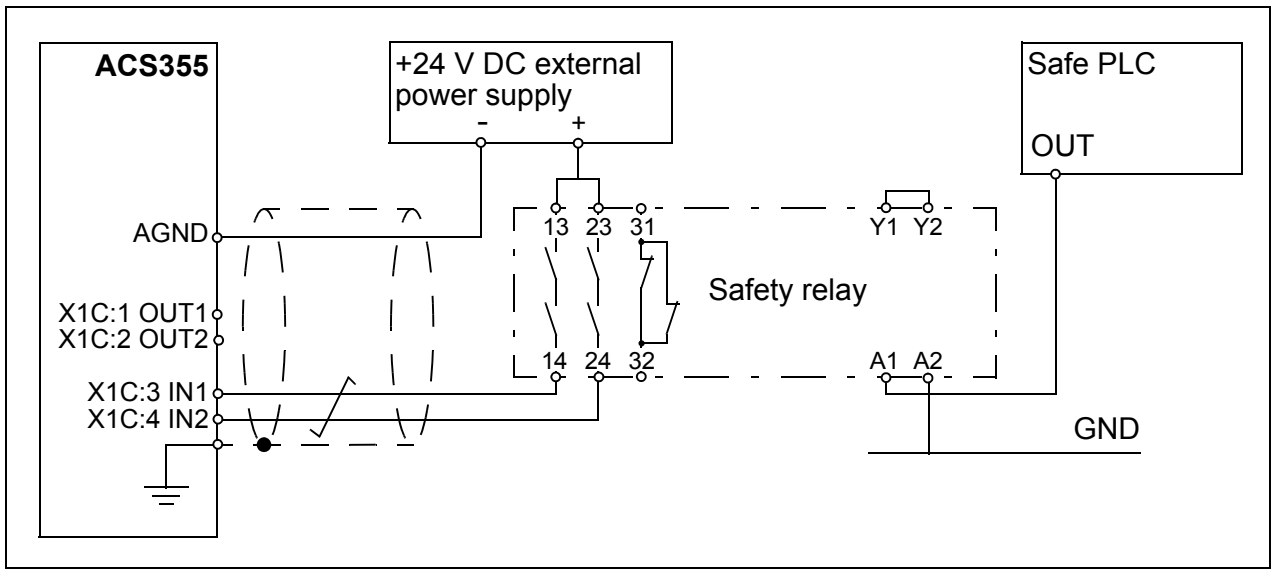

STO can also be daisy-chained from drive to drive, so that several drives are behind one safety switch. If STO outputs (OUT1 and OUT2) are used to supply the STO circuit, maximum five drives can be supplied. The number of drives depends on the

24 V auxiliary voltage load (I/O, panel load, used fieldbus or STO circuits; max. 200 mA) of the drive supplying the STO circuit (see section *Control connection data* on page *369*). When using external supply, all analog grounds (AGND) of the drives must be chained together.

Note: Daisy chaining lowers the total system safety integrity level, which needs to be calculated case by case for each system.

Start-up and commissioning

Always test the operation and reaction of the STO function before commissioning.

Technical data

STO components

STO safety relay type

General requirements	IEC 61508 and/or EN/ISO 13849-1
Output requirements	
No. of current paths	2 independent paths (one for each STO path)
Switching voltage capability	30 V DC per contact
Switching current capability	100 mA per contact
Maximum switching delay between contacts	200 ms
Example 1	Simple SIL3 approved safety relay
Type and manufacturer	PSR-SCP- 24UC/ESP4/2X1/1X2 by Phoenix Contacts
Approvals	EN 954-1, cat 4; IEC 61508, SIL3
Example 2	Programmable safety logic
Type and manufacturer	PNOZ Multi M1p by Pilz
Approvals	EN 954-1, cat 4; IEC 61508, SIL3; and ISO 13849-1, PL e

STO connection

Input for external STO supply	24 V DC ± 10%, load 25 mA
Input impedance	R_{in} = 2 kohm
Load	12 mA / channel
Output	Maximum load 200 mA depending on I/O load

STO cable

Type	2×2 cables, low voltage, single shielded, twisted pair cable
Conductor size	1.5…0.25 mm^2 (16…24 AWG)
Maximum length	Max. 25 m between STO inputs and the operating contact
Tightening torque	0.5 N·m (4.4 lbf·in)

Data related to safety standards

IEC 61508	
SIL	3
PFH	6.48E-09 (6.48 FIT)
HFT	1
SFF	91%

EN/ISO 13849-1	
PL	e
Category	3
MTTFd	470 years
DCavg	18%

IEC 62061	
SILCL	3

Abbreviations

Abbreviation	Reference	Description
CCF	EN/ISO 13849-1	Common Cause Failure (%)
DCavg	EN/ISO 13849-1	Diagnostic Coverage Average
FIT		Failure In Time: 1E-9 hours
HFT	IEC 61508	Hardware Fault Tolerance
MTTFd	EN/ISO 13849-1	Mean Time To dangerous Failure: (The total number of life units) / (the number of dangerous, undetected failures) during a particular measurement interval under stated conditions
PFHd	IEC 61508	Probability of Dangerous Failures per Hour
PL	EN/ISO 13849-1	Performance Level: Corresponds SIL, Levels a-e
SFF	IEC 61508	Safe Failure Fraction (%)
SIL	IEC 61508	Safety Integrity Level
STO	EN 61800-5-2	Safe Torque Off

Maintenance

Test the operation and reaction of the STO function every year.

Further information

Product and service inquiries

Address any inquiries about the product to your local ABB representative, quoting the type designation and serial number of the unit in question. A listing of ABB sales, support and service contacts can be found by navigating to www.abb.com/drives and selecting *Sales, Support and Service network*.

Product training

For information on ABB product training, navigate to www.abb.com/drives and select *Training courses*.

Providing feedback on ABB Drives manuals

Your comments on our manuals are welcome. Go to www.abb.com/drives and select *Document Library – Manuals feedback form (LV AC drives)*.

Document library on the Internet

You can find manuals and other product documents in PDF format on the Internet. Go to www.abb.com/drives and select *Document Library.* You can browse the library or enter selection criteria, for example a document code, in the search field.

Contact us

ABB Oy
Drives
P.O. Box 184
FI-00381 HELSINKI
FINLAND
Telephone +358 10 22 11
Fax +358 10 22 22681
www.abb.com/drives

ABB Inc.
Automation Technologies
Drives & Motors
16250 West Glendale Drive
New Berlin, WI 53151
USA
Telephone 262 785-3200
800-HELP-365
Fax 262 780-5135
www.abb.com/drives

ABB Beijing Drive Systems Co. Ltd.
No. 1, Block D, A-10 Jiuxianqiao Beilu
Chaoyang District
Beijing, P.R. China, 100015
Telephone +86 10 5821 7788
Fax +86 10 5821 7618
www.abb.com/drives

3AUA0000066143 Rev A (EN) EFFECTIVE: 2010-01-01

3AUA0000066143A

Power and productivity
for a better world™